ORDER NO.ITD9907012C3

Service Manual

Colour Television

TC-29P10N
TC-33P10N

LX1 Chassis

Specifications

Power Source: AC100 V, 60 Hz

Power Consumption:

TC-29P10N	TC-33P10N
134W	144 W
Stand-by condition 0.4W	Stand-by condition 0.4 W

Aerial Impedance: 75Ω unbalanced, Coaxial type

Receiving system: NTSC M

Tuning System: Voltage Synthesizer 100 position (Auto Search)

Receiving Channels:

VHF Band	2-13 (NTSC M U.S.A.)
UHF Band	14-69 (NTSC M U.S.A.)
CATV	1-125 (U.S.A. CATV)

Intermediate Frequency:

Video	45.75 MHz
Sound	41.25 MHz
Color	42.17 MHz (NTSC)

High Voltage: 31.0 (+0.7, -1.5)kV at zero beam current

Video / Audio Terminals:

AV1,2,3	S-Video IN	Y:1.0 Vp-p 75 Ω
		C:0.3 Vp-p 75 Ω
	Video IN	1 Vp-p 75 Ω
	Audio IN	0.5 Vrms
Monitor Out	Video Out	1 Vp-p 75 Ω
	Audio Out	0.5 Vrms

Picture Tube:

TC-29P10N	TC-33P10N
M68LQL185X	M79LQM185X
Type29 (73 cm)	Type 33 (85 cm)
104° deflection	104° deflection

Audio Output: 15W (5W+5W+5W)(10% THD)

Headphones: 3.5 mm Plug

Dimensions (W×D×H):

TC-29P10N	688 mm × 492 mm × 570 mm
TC-33P10N	790 mm × 555 mm × 653 mm

Mass:

TC-29P10N	48.0 kg (Net)
TC-33P10N	71.0 kg (Net)

Accessories Supplied:

Remote Controller × 1

"R6" Battery × 2

Specifications are subject to change without notice.
Mass and dimensions shown are approximate.

Panasonic

©1999 Matsushita Electric Industrial Co.,Ltd.
All right reserved. Unauthorized copying and distribution is a violation of law.

⚠ WARNING

This service information is designed for experienced repair technicians only and is not designed for use by the general public.
It does not contain warnings or cautions to advise non-technical individuals of potential dangers in attempting to service a product.
Products powered by electricity should be serviced or repaired only by experienced professional technicians. Any attempt to service or repair the product or products dealt with in this service information by anyone else could result in serious injury or death.

Contents

Specifications . . . . . Cover

Safety Precautions 3

In regard to the self-check function 5

Servicing method 6

Service Hint 7

Adjustment 12

Schematic Diagrams 29

Parts Location & Mechanical Replacement Parts List 45

Replacement Parts List 47

Safety Precautions

General Guide Lines

1. It is advisable to insert an isolation transformer in the AC supply before servicing a hot chassis.

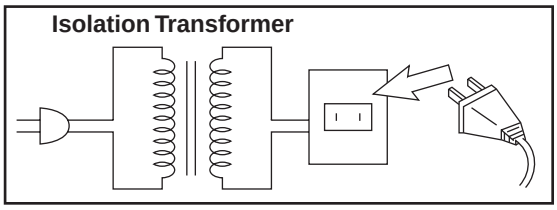

2. When servicing, observe the original lead dress, especially the lead dress in the high voltage circuits.
   If a short circuit is found, replace all parts which have been overheated or damaged by the short circuit.

3. After servicing, see to it that all the protective devices such as insulation barriers, insulation papers, shields, and isolation R-C combinations, are properly installed.

4. When the receiver is not be used for a long period of time, unplug the power cord from the AC outlet.

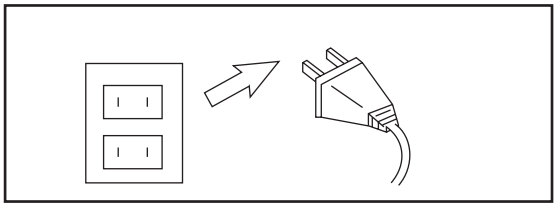

5. Potential, as high as **33.0 kV**, is present when this receiver is in operation. Operation of the receiver without the rear cover involves the danger of a shock hazard from the receiver power supply. Servicing should not be attempted by anyone who is not thoroughly familiar with the precautions necessary when working on high voltage equipment. Always discharge the anode of the picture tube to the receiver chassis before handling the tube.

6. After servicing make the following leakage current checks to prevent the customer from being exposed to shock hazards.

Leakage Current Cold Check

1. Unplug the AC cord and connect a jumper between the two prongs on the plug.

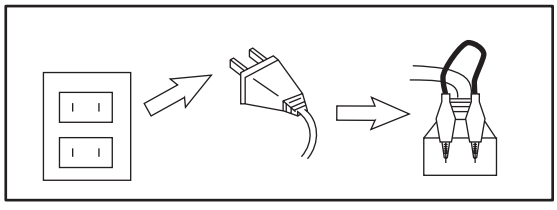

2. Turn on the receiver's power switch.

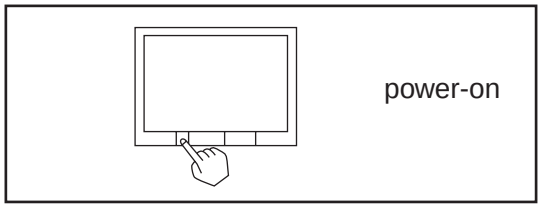

3. Measure the resistance value, with an ohmmeter, between the jumpered AC plug and each exposed metallic cabinet part on the receiver, such as screw heads, aerials, connectors, control shafts, etc. When the exposed metallic part has a return path to the chassis, the reading should be between 4 MW and 20 MW.
   When the exposed metal does not have a return path to the chassis, the reading must be •.

Leakage Current Hot Check

1. Plug the AC cord directly into the AC outlet. Do not use an isolation transformer for this check.

2. Connect a 2kW, 10W resistor, in series with an exposed metallic part on the receiver and an earth such as a water pipe.

3. Use an AC voltmeter, with high impedance type, to measure the potential across the resistor.

4. Check each exposed metallic part, and measure the voltage at each point.

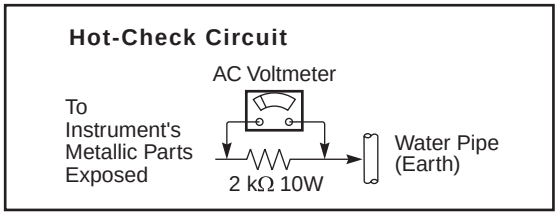

5. Reverse the AC plug in the AC outlet and repeat each of the above measurements.

6. The potential at any point should not exceed **1.0 Vrms**. In case a measurement is outside of the limits specified, there is a possibility of a shock hazard, and the receiver should be repaired and rechecked before it is returned to the customer.

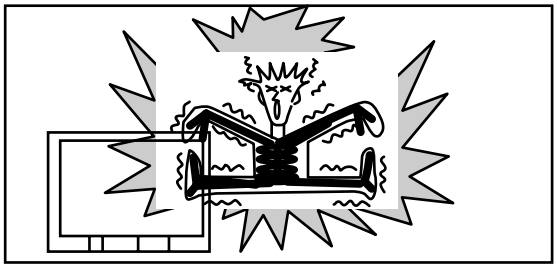

X-Radiation

Warning:

1. The potential sources of X-Radiation in TV sets are the High Voltage section and the picture tube.

2. When using a picture tube test jig for service, ensure that jig is capable of handling **33.0kV** without causing X-Radiation.

Note: It is important to use an accurate periodically calibrated high voltage meter.

1. Set the brightness to minimum.
2. Measure the High Voltage. The meter reading should indicate **31.5 (+1.5, -1.5) kV**. If the meter indication is out of tolerance, immediate service and correction is required to prevent the possibility of premature component failure.
3. To prevent an X-Radiation possibility, it is essential to use the specified picture tube.

In regard to the self-check function

When phenomena like “the power fails from time to time” or “the video/audio fails from time to time” can not be confirmed at the time of servicing, the self-check function can be used to confirm the occurrence and to limit the scope for the defective circuits.
Also, when “the power fails from time to time”, display of the color bar on the screen can be used confirm the occurrence and to limit the scope for the defective circuits.

Display method and display position

Display method

When display is desired

Hold [⏲] (OFF TIMER) on the remote control pressed and press [VOL -] on the TV set. (The reception screen switches to TV monitor, and a screen as shown on the right appears.)

To return to normal display

When one of the buttons for channel selection etc. is operated, the display returns to the normal screen.

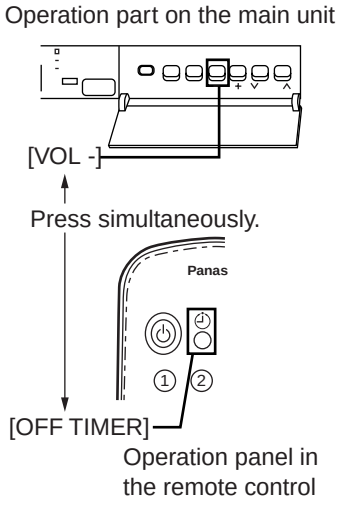

Display position

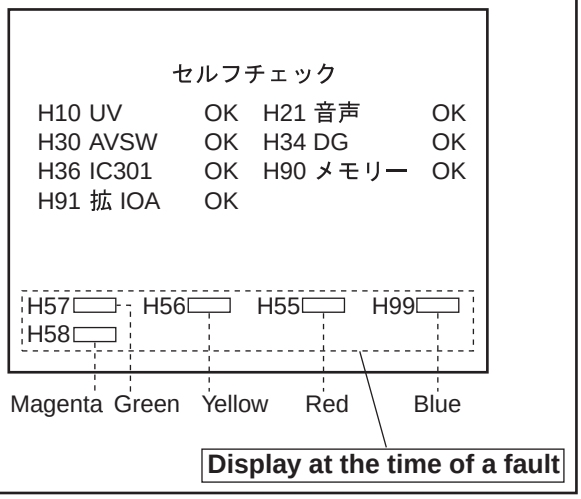

Display phenomenon and treatment method

Display symbol	Phenomenon, condition	Treatment method
H10	No output of video and audio.	Exchange the tuner (TNR001).
H21	Audio stop. Surround function not effective.	Inspect the main board [A] IC2401 (audio compensation).
H30	No video and audio. Surround function not effective.	Inspect the rear terminal switching board [H] IC3001.
H34	No video. No raster. Color stop. No color synchronization. Wrong colors. Bad on-screen display. No horizontal/vertical synchronization.	Inspect the digital core board [DG] IC6601.
H36	No video. Color stop. Wrong colors. Bad on-screen display. No horizontal/vertical synchronization.	Inspect the video signal processing board [AG] IC301.
H55	The red bar is displayed momentarily and then the power is interrupted. The power signal lamp (red) flashes three times in intervals of 2.8 sec.	Detection of overcurrent (140V line), vertical output. Detection of 25 V line overcurrent, 25V line.
H56	The yellow bar is displayed for 0.5 sec., and then the power is interrupted. The power signal lamp (red) flashes twice in intervals of 3.3 sec.	“Power failure from time to time” because of the overcurrent (140V line), vertical output (+15V line).
H57	The green bar is displayed for 1 sec., and then the power is interrupted. The power signal lamp (red) flashes once in intervals of 3.8 sec.	“Power failure from time to time” because of the overcurrent (140V line), vertical output (+15V line).
H58	Abnormal power circuit. The power does not come up, and it is switched off after a few seconds.	Inspect the main 5V line.
H90	The memory gets lost.	Exchange the main board [A] IC1114 (memory).
H91	One horizontal line is not obtained at the time of servicing.	Inspect the main board [A] IC1201 (expansion DAC).
H99	“No video from time to time” because of causes in the antenna~tuner~video circuit. *This also may be displayed when the antenna plug is disconnected or when a channel without a signal is received.	Inspect the tuner~video circuit.

Servicing method

Application of silicone grease to the anode cap

⚠ Warning

Please apply grease when the anode cap has been removed.
- Please discharge the high voltage from the anode.
- Wipe off the applied grease and then apply new grease.
- Follow the illustration on the right for the application.

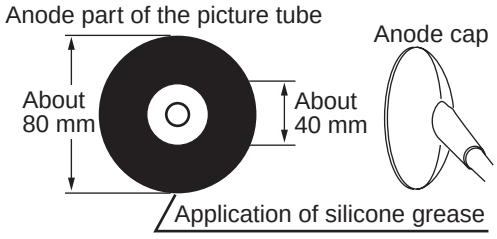

Wiring routing

⚠ Warning

Restore the installation of parts and the wiring routing to the original condition.

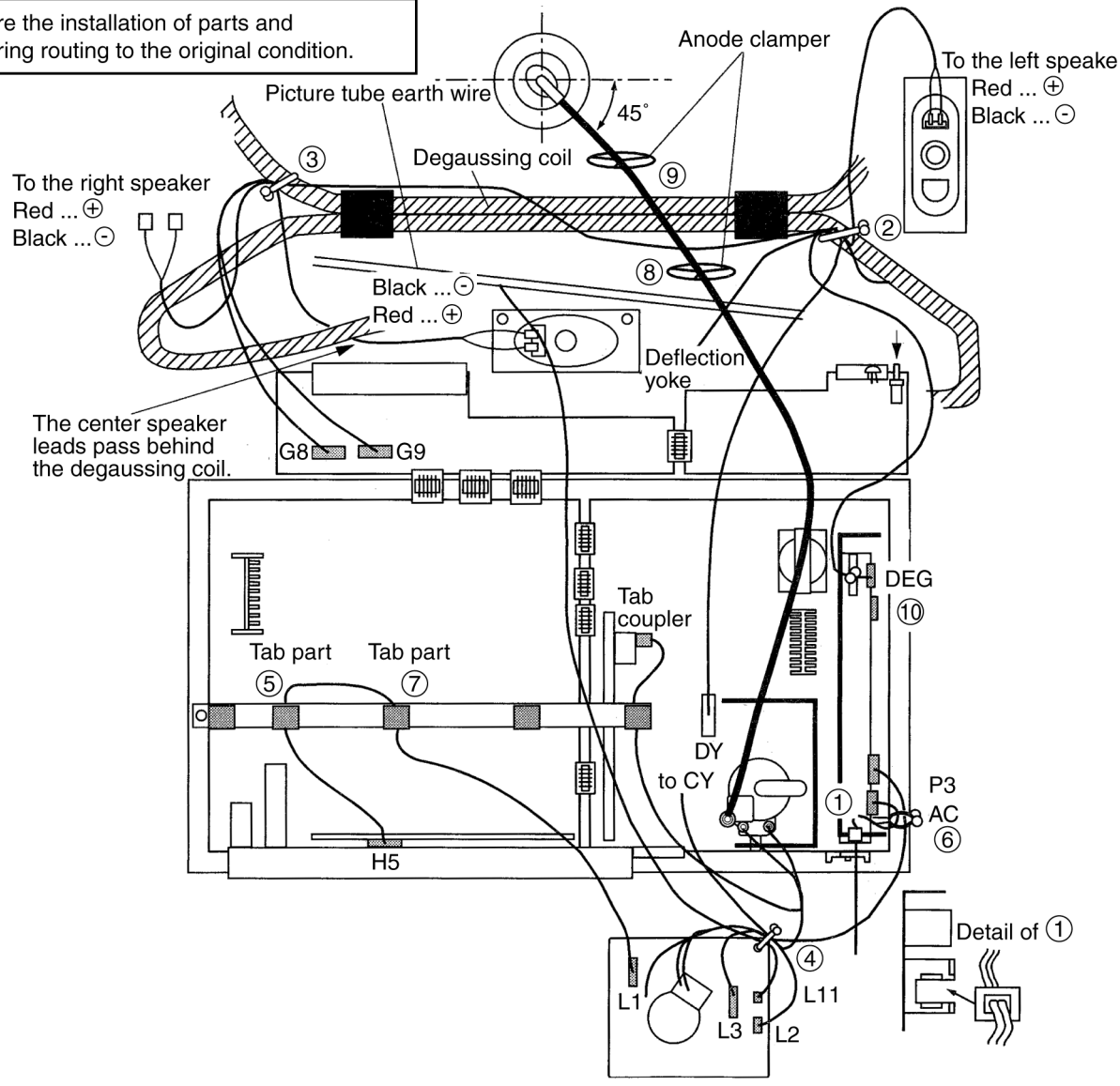

Lead wire \ Clamper	①	②	③	④	⑤	⑥	⑦	⑧	⑨	⑩
SP (left) lead [G9]		○	○							
Anode lead								○	○	
DY		○								
Focus, screen				○						
Center SP [G8]			○							
CY				○						

Lead wire \ Clamper	①	②	③	④	⑤	⑥	⑦	⑧	⑨	⑩
AC	○					○				
DEG		○								○
SP (right) lead [G8]			○							
L11				○						
P3				○		○				
H5					○		○			

Service Hint

How to chassis into service position

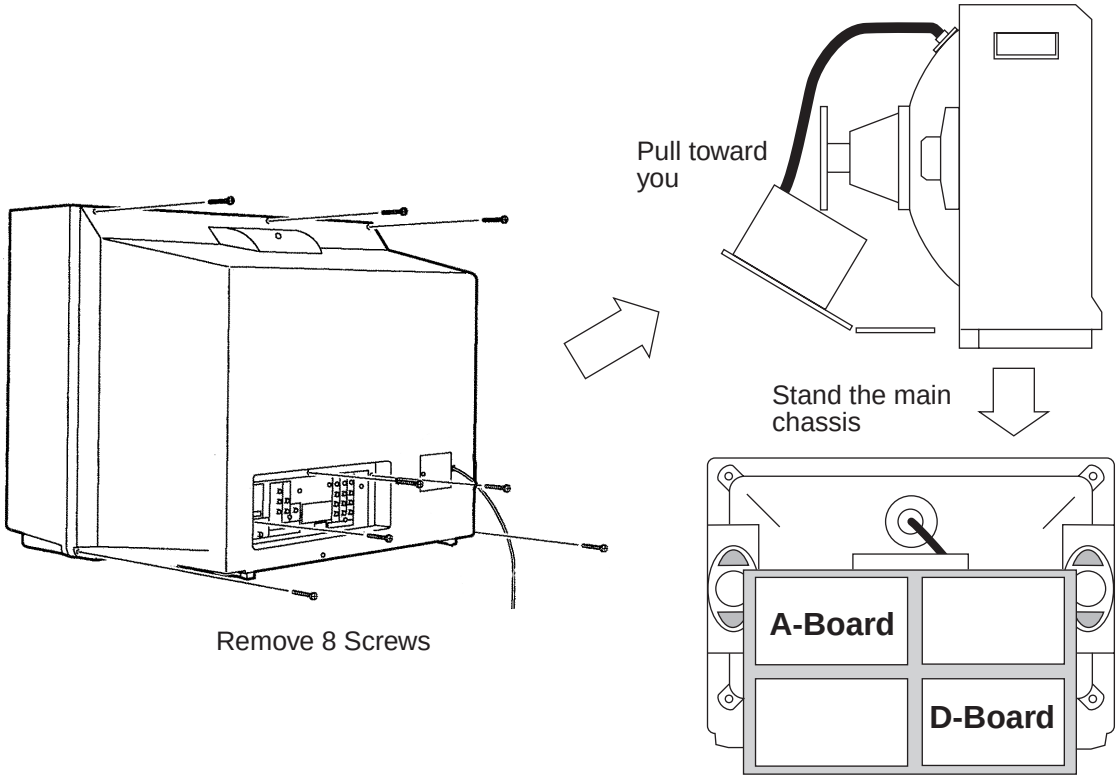

Service Position for DG-board.

Note: Extension cable kit (4 pieces of 8 pin cable) is supplied as service fixtures and tools. (Part No. TZS 709010).

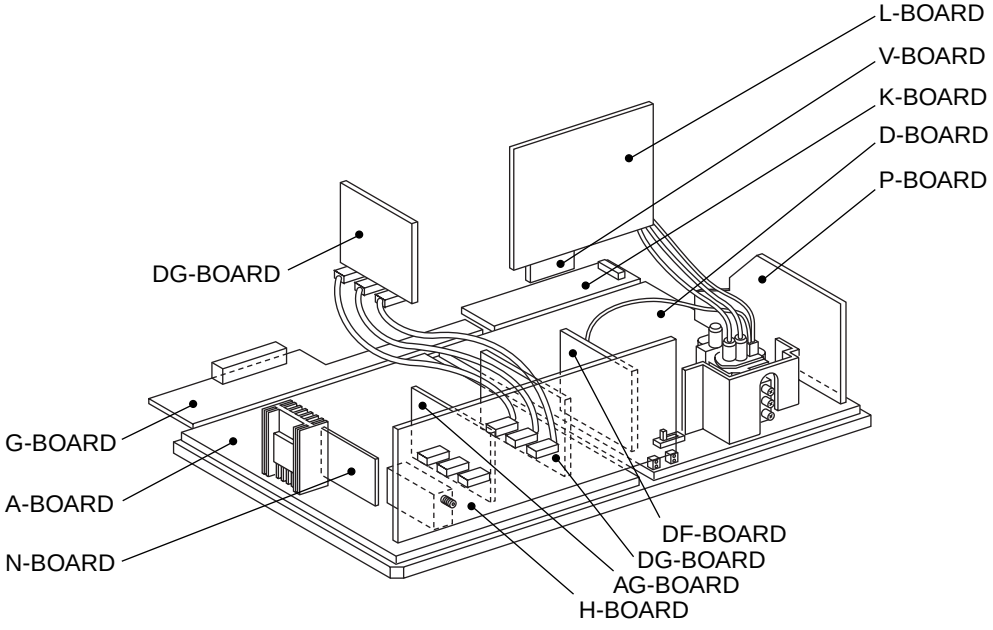

Board and module layout drawing

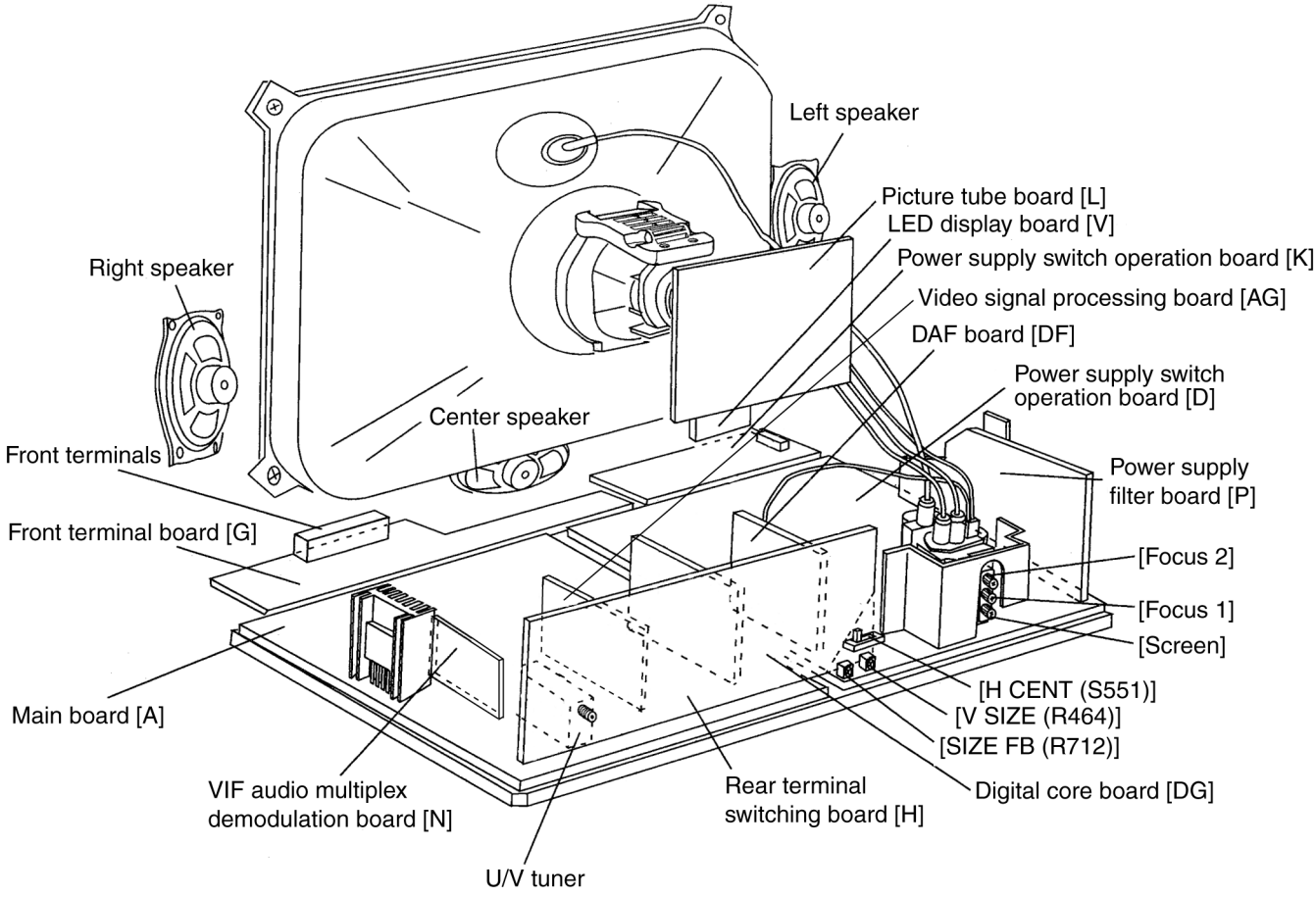

Before inspection

1. Remove the screws fixing the rear cover (8 screws) and the screw fixing the AC code cover.

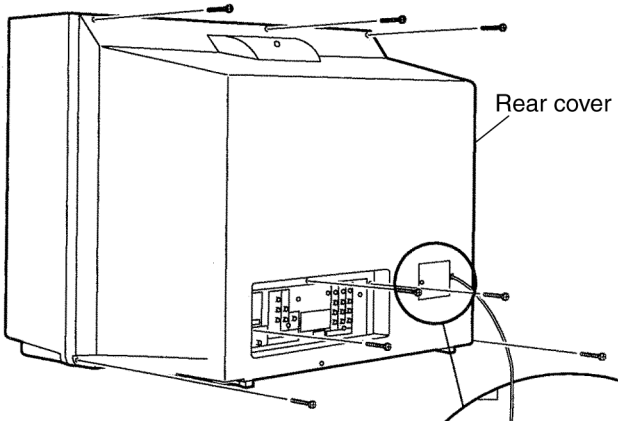

2. Remove the AC code cover and the rear cover.

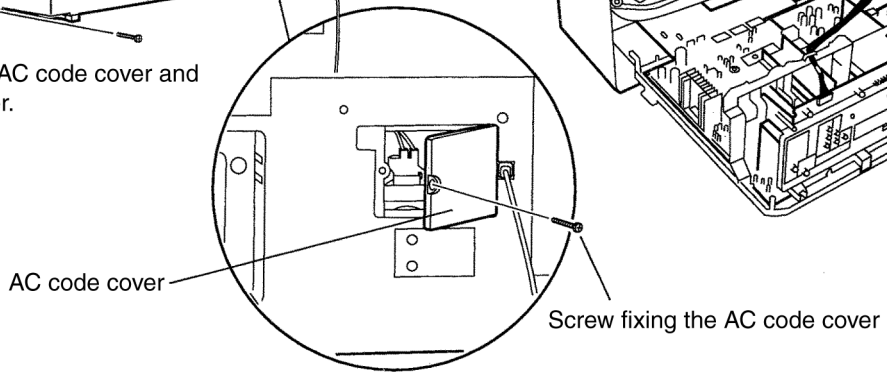

Inspect the board [L] and adjust the white balance, H-V, etc.

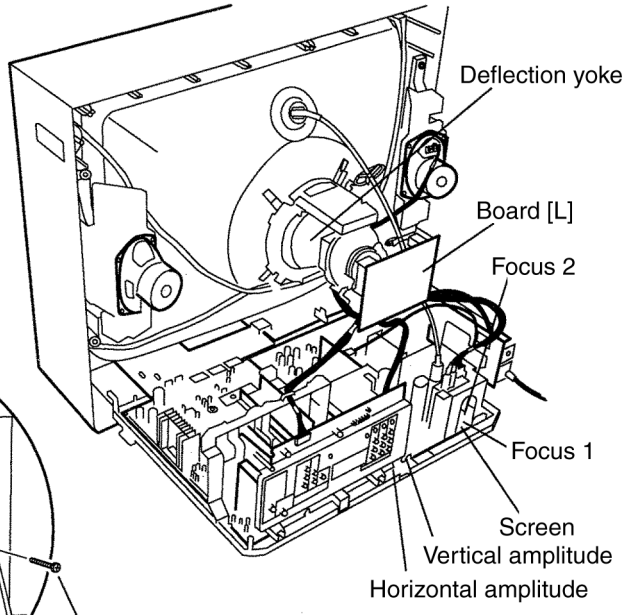

Inspection of the boards [A] and [D]

1. Disconnection the degaussing coil cable and the speaker cable clamps (2 places) and the lead clamps on the print holder (2 places), and disconnect the degaussing coil coupler from the board.
2. Pull out the chassis frame to the front.

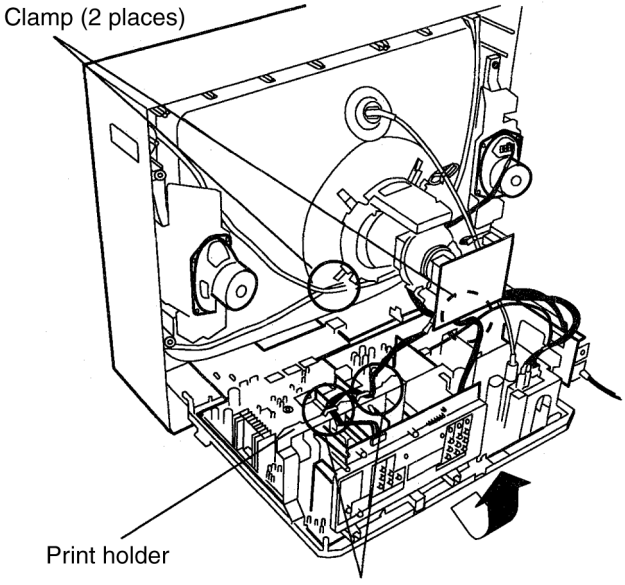

Clamps on the print holder (2 places)

3. Tilt the pulled-out chassis frame as shown in the following figure and inspect the pattern side.
   At this time, use a cloth or similar for insulation.

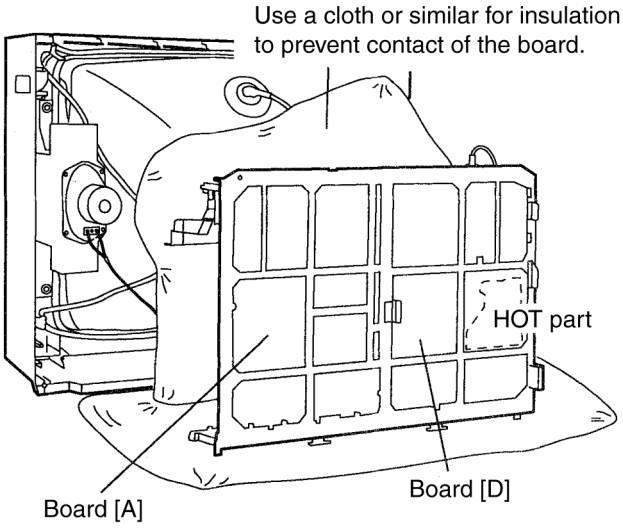

⚠ Warning	
⚠	Electric shock may be caused when HOT parts are touched. An electric shock will be caused when the HOT part and the COLD part are touched at the same time.

Inspection of the boards [G] and [K]

1. Pull out the chassis frame to the front, and rotate the chassis frame as shown in following figure.
   Now inspection is possible from the parts side of the boards [G] and [K].

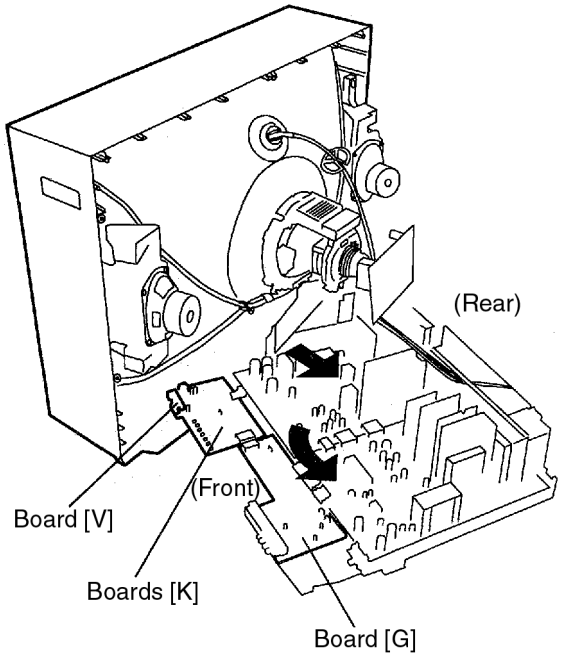

2. Disengage the tabs (4 places) tilt up the board [K] in arrow direction, and inspect it with the pattern side on top. At this time, place a cloth underneath for safety (insulation).
3. At the time of installation, match the board and the chassis pins and install.

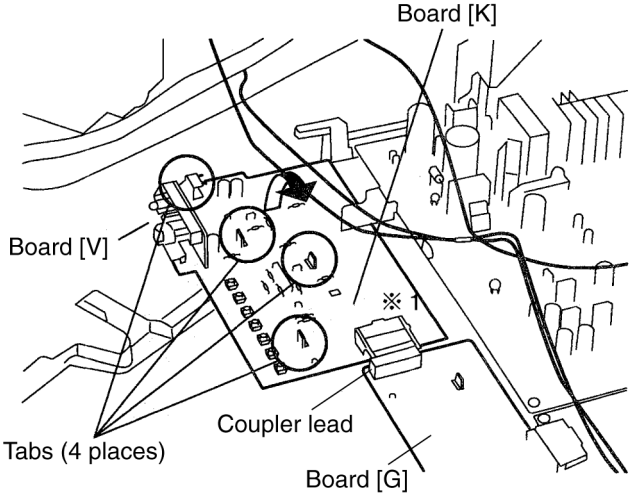

⚠ Caution	
⚠	※1 When the board [K] has been removed from the chassis frame, pay attention to prevent the coupler leads of board [K] and board [G] from getting torn.

Inspection and exchange of the rear terminal switching board [H]

1. Remove the screws fixing the rear terminal cover (3 screws), disengage the locking tabs (4 places), and remove the rear terminal frame.

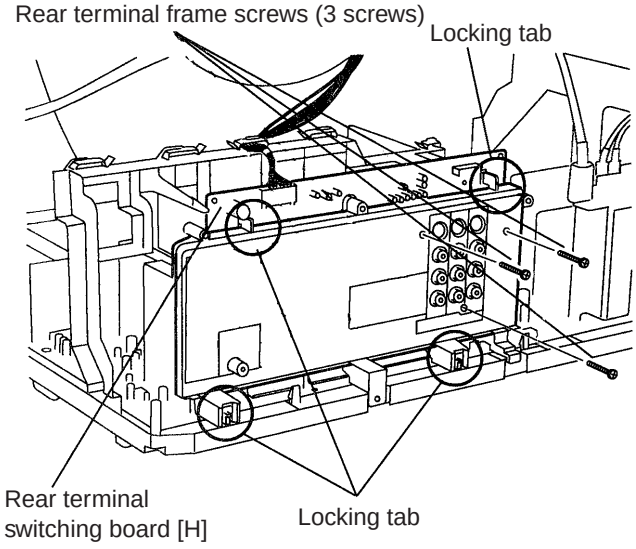

2. Disengage the cable (between H5 and L1) from the lead clamp on the print holder, and tilt the rear terminal switching board [H] down to the front.

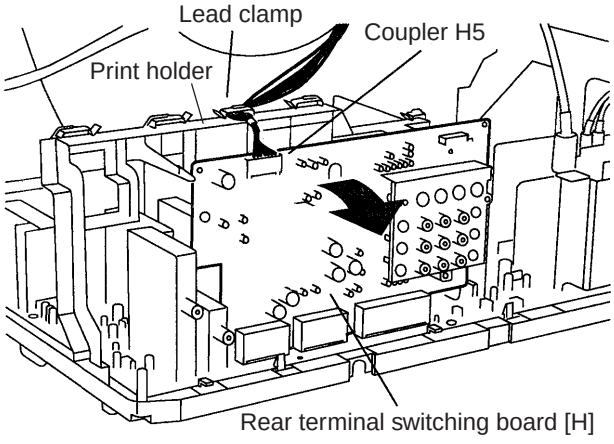

3. Inspection is possible in the following condition.
4. In case of exchange, disconnect the coupler H5 from the rear terminal switching board [H], and disengage the coupler in upward direction either in this condition or with the rear terminal switching board [H] slightly raised.

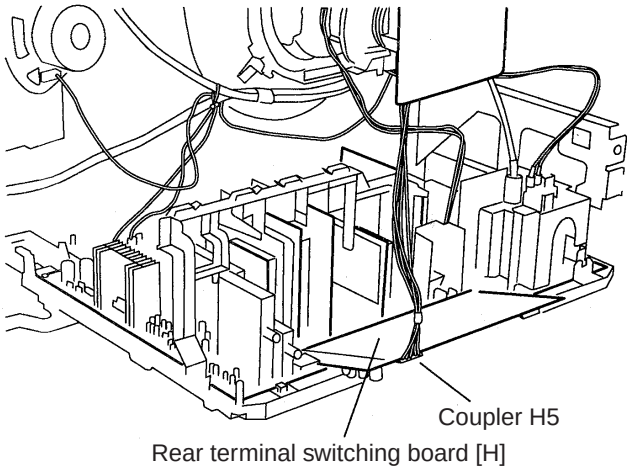

Exchange of each board

1. Disengage the cable (between H5 and L1) from the lead clamp on the print holder.
2. Remove the print holder set screw, disengage the tab, and remove the print holder.

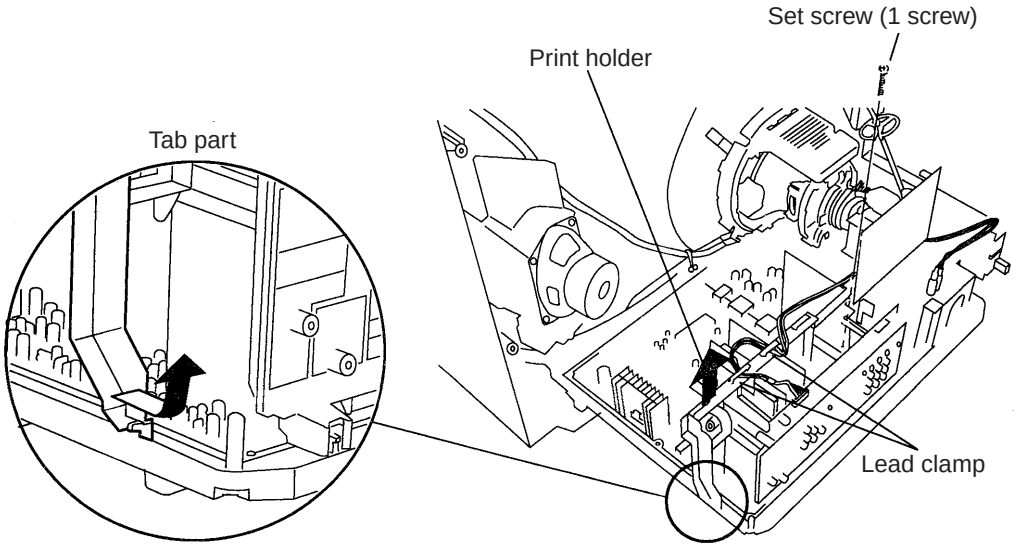

3. Pull out the board to be exchanged to the top and replace it.
4. For the VIF audio multiplex demodulation board [N], remove the solder on the side of the board [A] and then exchange.
   ※ When the DAF board [DF] has been exchanged, perform **"DAF Phase Adjustment"** (refer to page 26). When the video signal processing board [AG] has been exchanged, confirm the TV signal, the color bar signal, etc. On the screen and perform **"Contrast Adjustment, Color Output/Color Hue Adjustment"** (refer to page 36 and 27) asa required.
   (For easier understanding of the explanations, the condition with removed print holder is shown. The rear terminal switching board [H] also has been removed for the explanations.)

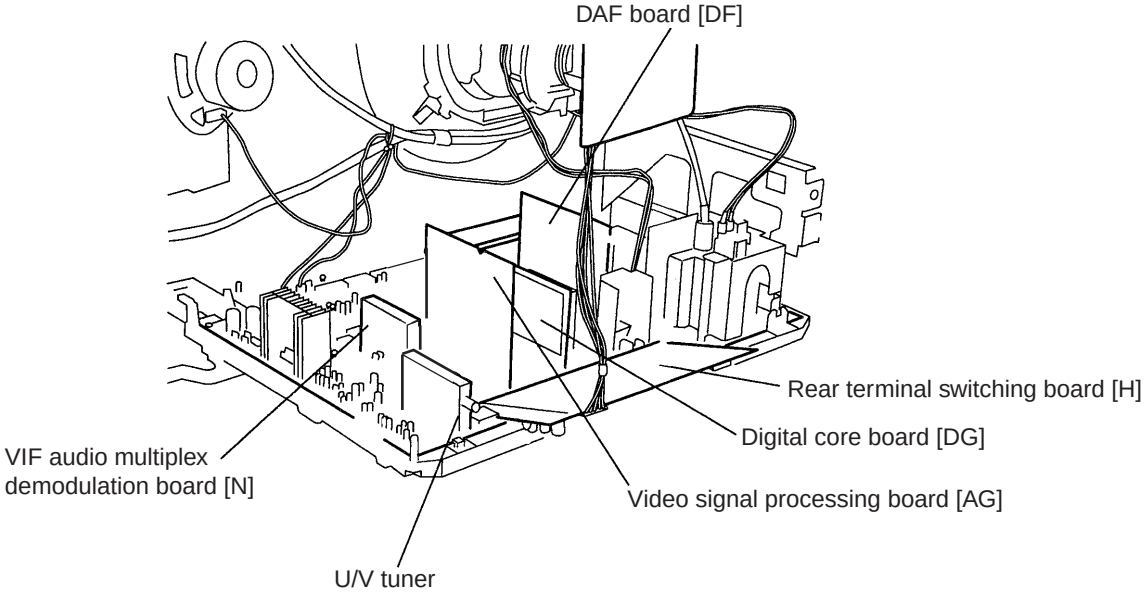

Adjustment

As shown in the following table, adjustment is required when some parts have been exchanged.

Exchange part / Adjustment	Memory IC1114	Digital core board [DG]	Video signal processing board [AG]	Picture tube	Deflection yoke	Flyback transformer T551	DAF board [DF]
White balance adjustment	●	●	○	●	—	—	—
H-V adjustment	●	○	○	○	○	○	—
Amplitude compensation adjustment	—	—	—	○	○	●	—
DAF phase adjustment	—	—	—	—	—	—	●
Focus adjustment	—	—	—	●	○	●	○
Contrast adjustment	—	—	△	—	—	—	—
Color output/hue adjustment	—	—	△	—	—	—	—

●: Always requires adjustment ○: Confirmation by pattern, adjustment as required.
△: Confirmation by TV signal, color bar signal, etc., adjustment as required.

In regard to service adjustment mode

How to enter into service adjustment mode

Press the button [VOL -] inside the door of the main unit while pressing the button [Recall [+]] on the remote control transmitter three times in a row (within 2 seconds).

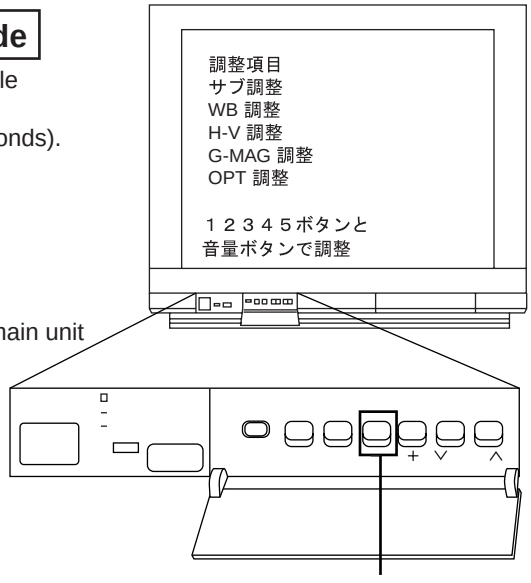

Remote control buttons

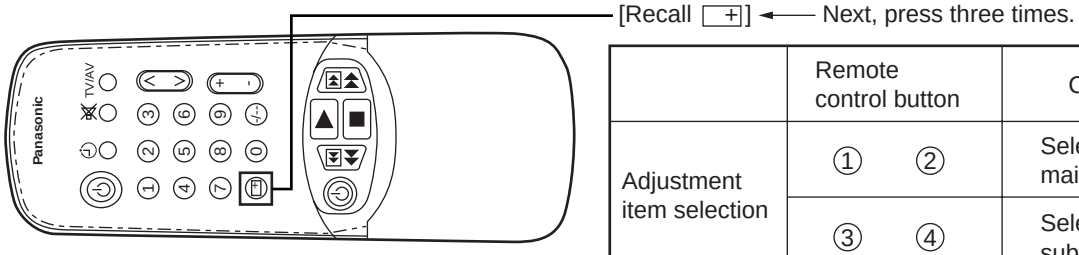

	Remote control button	Contents
Adjustment item selection	① ②	Selection of main items
	③ ④	Selection of sub-items
Screen for one horizontal line	⑤	For white balance adjustment
Adjustment	Volume +/-	

*Channel selection is done with the [CHANNEL ∨ ∧] button.

Cancellation

Switch off the power with the [POWER] button on the main unit or the [POWER] button on the remote control.

- **Caution item**

1. After entering service adjustment mode, perform adjustment after making notes of the values for each item. The written values (data) differ according to the set. Using the notes value as a referncefacilites adjustment.
2. The iten **[OPT 調整] (OPT adjusmtment)** in the contents for service adjusmtent mode is for aadjusmtment at the plate. Stay away form this item, at it means adjustment of all items.

In regard to the adjustment items

1. Main Items

Initial screen for service adjustment mode

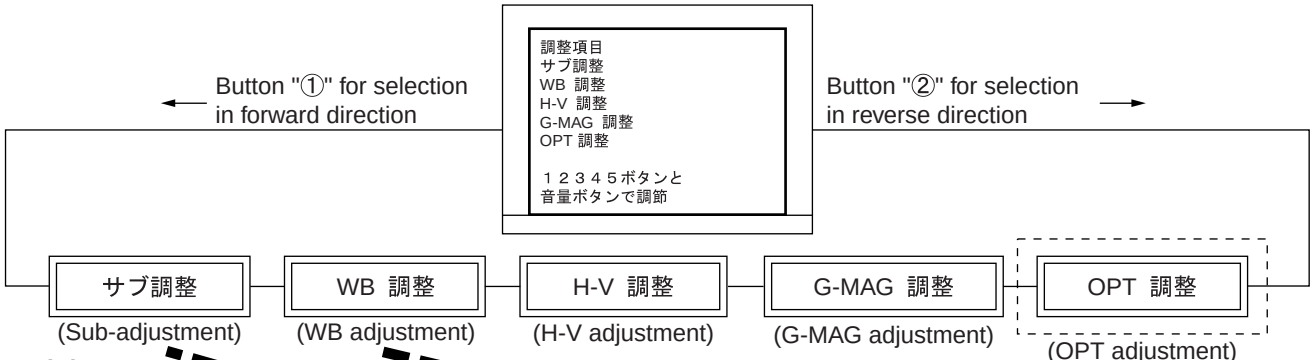

(Sub-adjustment) (WB adjustment) (H-V adjustment) (G-MAG adjustment) (OPT adjustment)

※ For factory adjustment, do not touch.

2. Sub-items

"Sub-adjustment" and "WB adjustment"

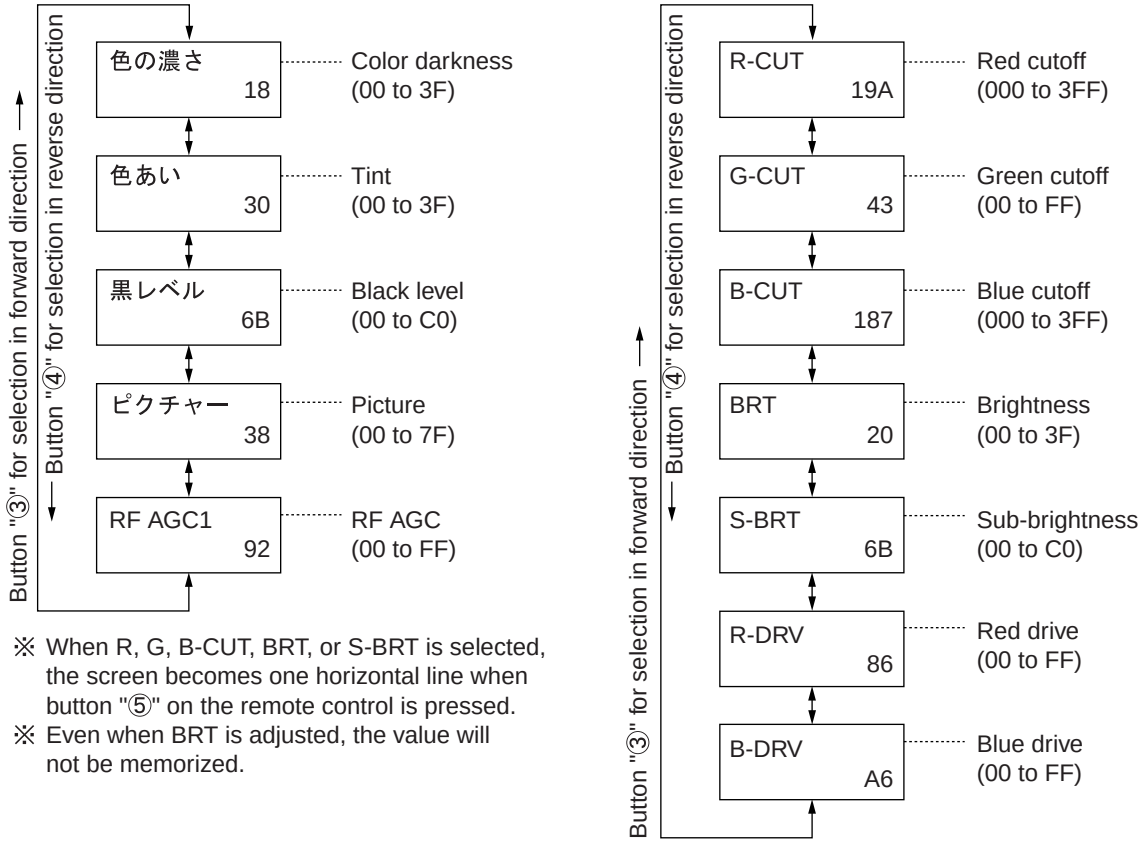

※ When R, G, B-CUT, BRT, or S-BRT is selected, the screen becomes one horizontal line when button "⑤" on the remote control is pressed.

※ Even when BRT is adjusted, the value will not be memorized.

How to read the diagram

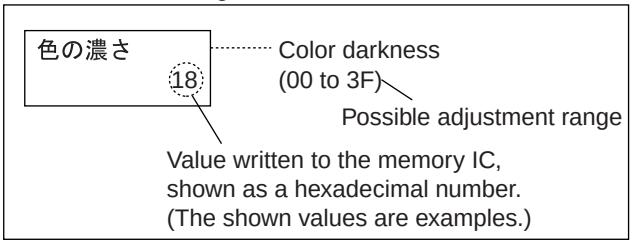

• Caution items

1. After entering service adjustment mode, perform adjustment after making notes of the values for each item.
   The written values (data) differ according to the set.
   Using the noted values as a reference facilitates the adjustment.
2. The item **[OPT 調整] (OPT adjustment)** in the contents for service adjustment mode is for adjustment at the plant.
   Stay away from this item, as it means adjustment of all items.

• H-V adjustment

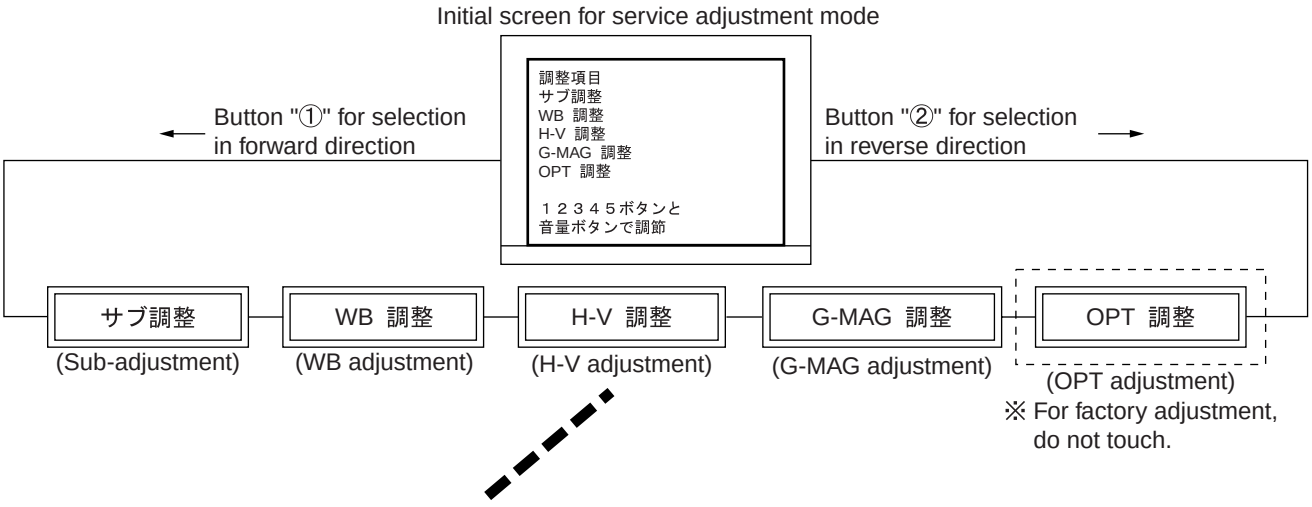

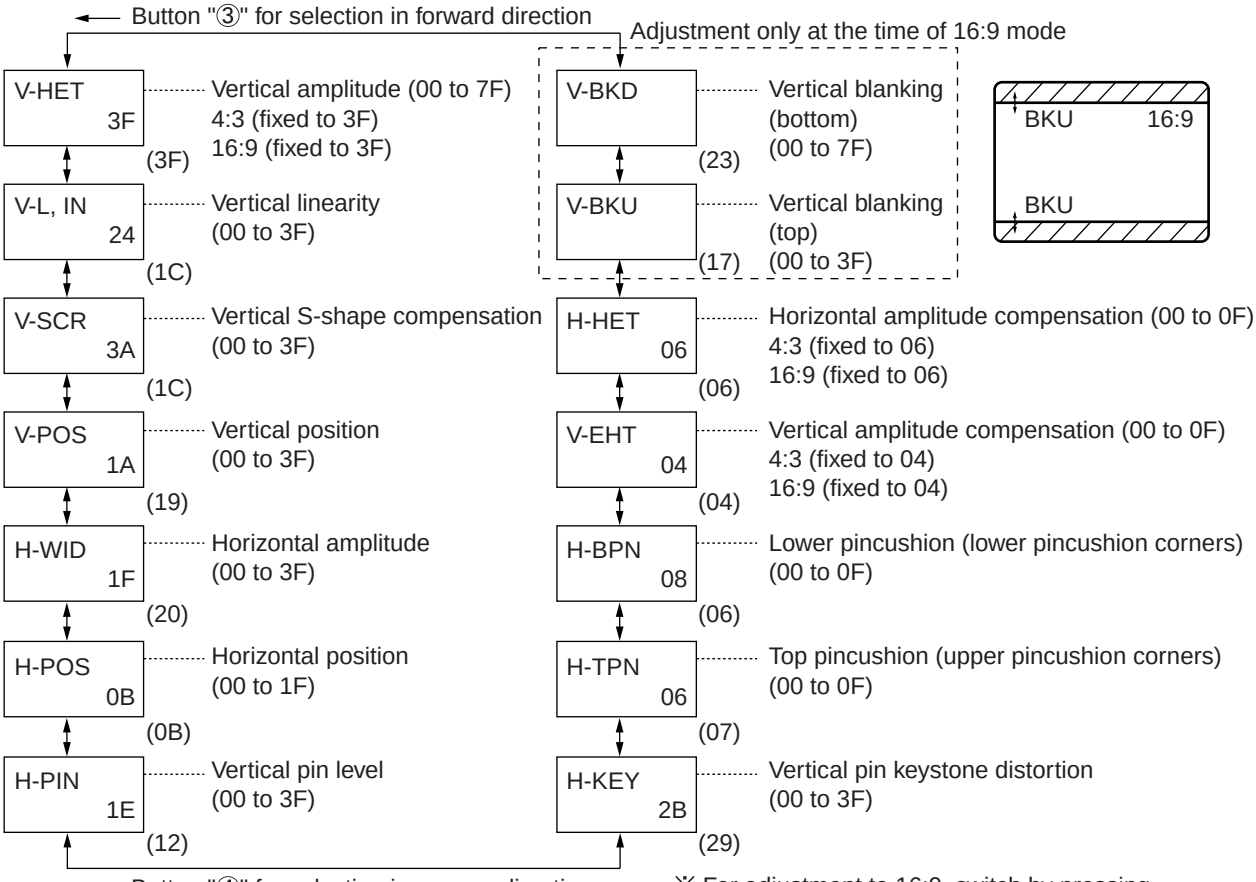

• Caution items

1. When H-key (vertical pin keystone distortion) is adjusted, the vertical position changes, and V-POS (vertical position) must be adjusted.
   However, when the vertical position is raised too much, the on-screen display no longer can be seen.
2. The item **[OPT 調整] (OPT adjustment)** in the contents for service adjustment mode is for adjustment at the plant. Stay away from this item, as it means adjustment of all items.
3. After entering service adjustment mode, perform adjustment after making notes of the values for each item. The written values (data) differ according to the set. Using the noted values as a reference facilitates the adjustment.

Adjustment accompanying exchange of the picture tube

- When the picture or the deflection yoke ha been exchanged, perform all of the following adjustment in the following order. When no part exchange has been done, adjustment still must be performed.

Procedure

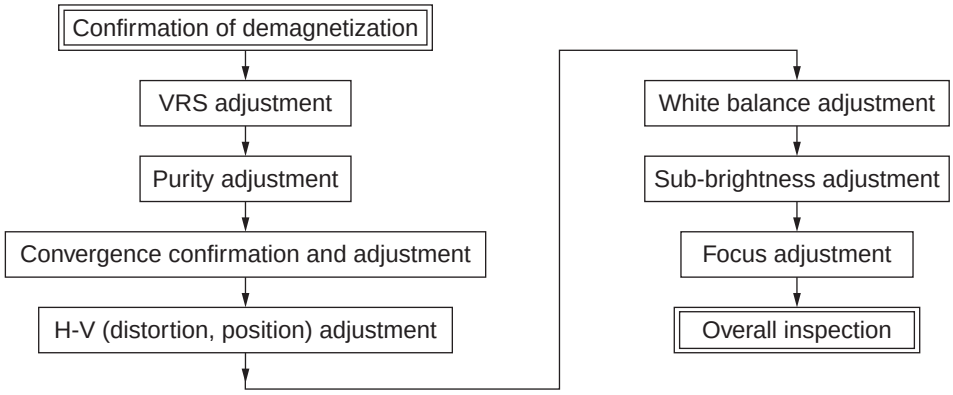

Adjustment

Installation and provisional adjustment method	Purpose: Facilitation of adjustment after installation
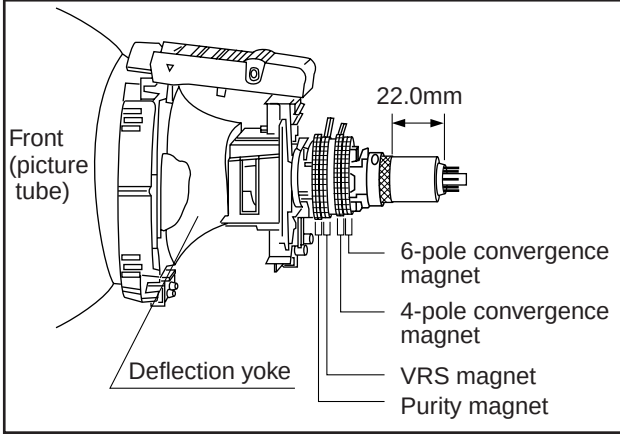	1. Push the deflection yoke all the way to the front and fix it provisionally. 2. Align the knobs of purity magnet, 4-pole convergence magnet, and 6-pole convergence magnet to minimize the composite magnetic field. 3. Demagnetize the front and the rear of the picture tube, the left and the right side of the cabinet, etc. with a demagnetization coil. At this time, keep the demagnetization coil away from the deflection yoke. 4. Receive a color pattern and perform aging for at least one hour.

1. VRS adjustment	Purpose: Adjusting the red, blue, and green electron beams so that they hit the specified fluorescent substance correctly.
Adjustment jig	Demagnetizer, color bar generator
Measuring location	TV screen (visual observation)
Input signal	Crosshatch pattern

1. Receive a crosshatch pattern.
2. Confirm that the knobs of purity magnet, 4-pole convergence magnet and 6-pole convergence magnet all are aligned.
3. Loosen the screws fixing the deflection yoke and provisionally fix the deflection at the very front position with adjusted inclination.
4. Adjust the VRS magnet (Fig. 2) so that the horizontal lines of the crosshatch pattern become level (Fig. 3).
5. Next, perform purity adjustment.

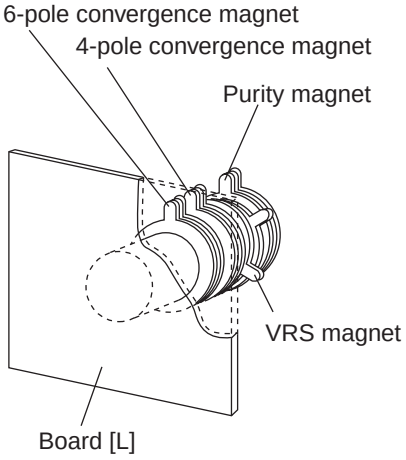

Fig. 1

Fig. 2

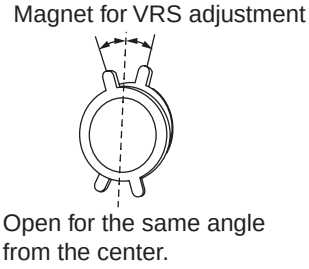

Fig. 3

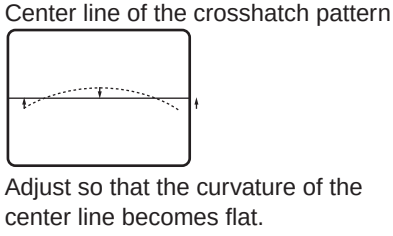

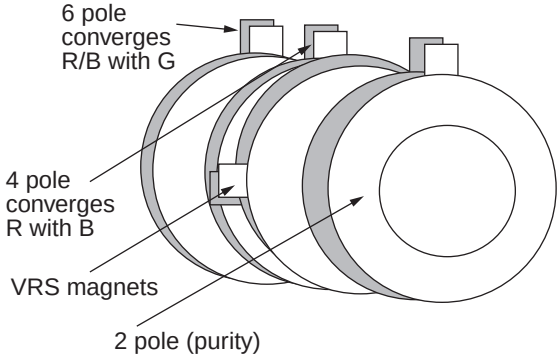

Setting of CY magnets (33 inch models)

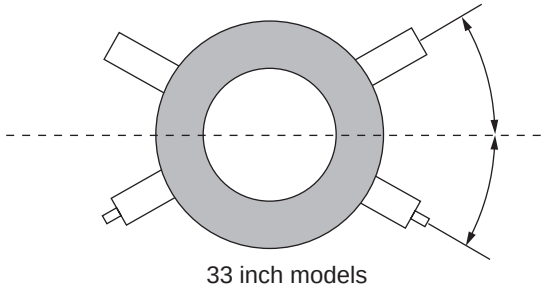

33 inch models

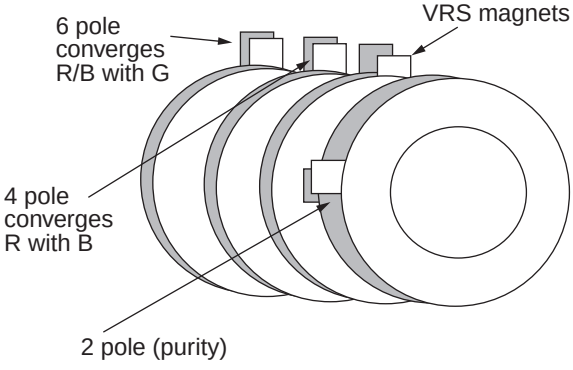

Setting of CY magnets (29 inch models)

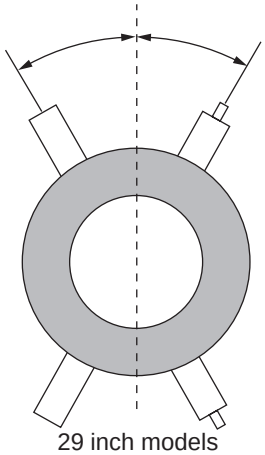

29 inch models

Opening for VRS magnets

2. Purity Adjustment	Purpose: Adjusting the red, blue, and green electron beams so that they hit the specified fluorescent substance correctly.
Adjustment jig	Color bar generator
Measuring location	TV screen (visual observation)
Input signal	Crosshatch pattern Red pattern (red single color signal) Rainbow color pattern

1. Receive a crosshatch pattern and perform simple adjustment of the convergence with the convergence magnets.
2. Receive a red pattern (red single color signal).
3. Slide the deflection yoke to the rear (towards board [L] and fix it provisionally when the red vertical bar appears.
4. Adjust the purity magnets so that the red vertical bar comes to the center of the screen. (Fig. 4)

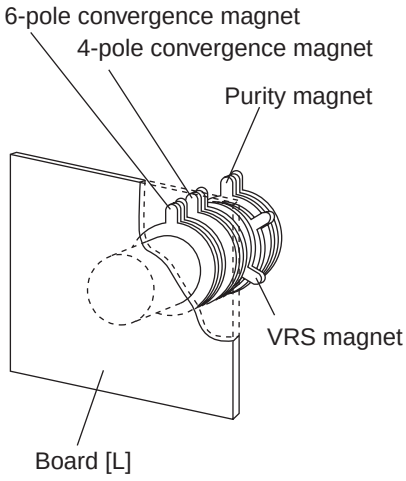

Fig. 4

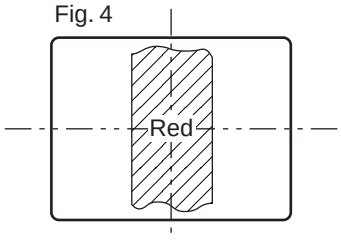

Purity magnet

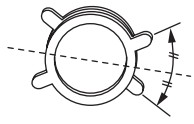

5. Loosen the provisionally fixed deflection yoke, move it to the rear, so that the entire screen becomes red, and fix it provisionally in that position.
   Confirm the single-color condition of the entire screen for blue and green.
   ※ In case of uneven coloring, repeat the adjustments 3. and 4. for the color with the uneven coloring.
6. Receive a rainbow color bar, and use the TV reception channel fine adjustment for a black-and-white image. (Or use color pattern generator chroma signal cut.)
7. Confirm that there is no partial coloring for the entire screen.
   If there is partial coloring, remove the color unevenness by moving the deflection yoke slightly in forward-backward direction.
   ※ If the color unevenness can not be removed, repeat the adjustments 1. to 4.
8. Tighten the screws fixing the deflection yoke and return the TV fine adjustment to the original setting.

3. Convergence Adjustment	Purpose: Adjustment of the image color deviation
Adjustment jig	Color bar generator
Measuring location	TV screen (visual observation)
Input signal	Crosshatch pattern Red pattern (red single color signal) Rainbow color pattern

1. Receive a crosshatch pattern.
2. Gradually open the knobs of the 4-pole convergence magnets and match the red and blue vertical lines at the center of the screen.
   Next, rotate the entire 4-pole magnets to match the red and blue horizontal lines. (Fig. 5)

Fig. 5

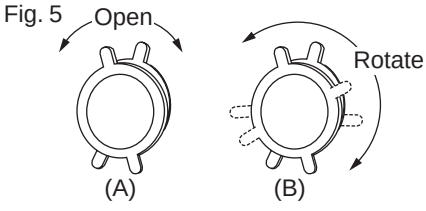

4-pole convergence magnets

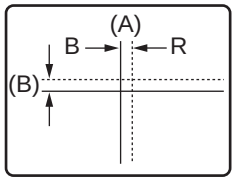

Match red and blue

Fig. 6

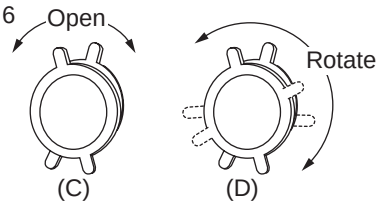

6-pole convergence magnets

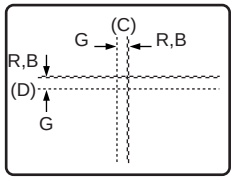

Match red and blue to green

3. Gradually open the knobs of the 6-pole convergence magnets and match the red and blue vertical lines at the center of the screen. (At this time, red and blue will move practically at the same time.) Next, rotate the entire 6-pole magnets to match the red and blue horizontal lines to green. (Fig. 6)

Fig. 7

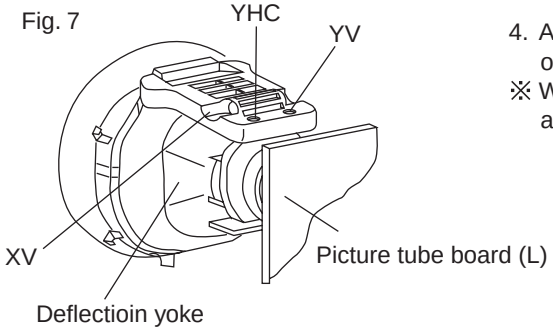

4. Adjust YHC, YV, and XV on the deflection yoke (Fig. 7) so that the overall convergence becomes good. (Fig. 8, 9, 10)

※ When the convergence at the screen center is off, repeat the adjustment from item 2.

Fig. 8 YHC

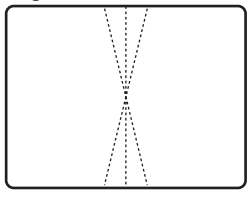

Fig. 9 YV

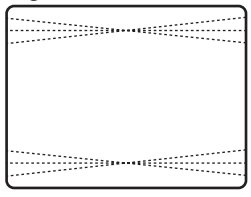

Fig. 10 XV

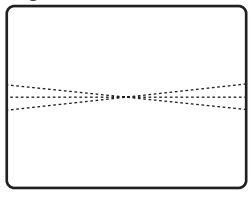

• Caution items

- Tilt adjustment with tilting the deflection yoke in up-down or left-right direction is not performed for this unit. Please do nottry to do this. Perform YV adjustment for left-right tilt adjustment and YHC adjustment for up-down adjustment.
- As the XV adjustment core can crack easily, use a nonmetallic screwdriver for the adjustment.

5. After the adjustment, apply paint lock to the magnets.
6. When the position without deviation of the three colors has been determined, insert wedges between the deflection yoke and the picture tube as shown (Fig. 11 below) to fix the deflection yoke.

Wedge

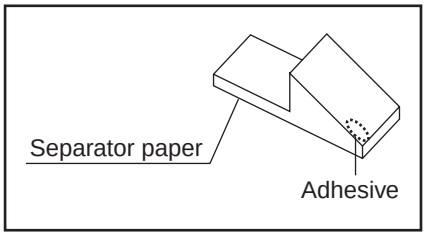

Fig. 11 Wedge insertion positions

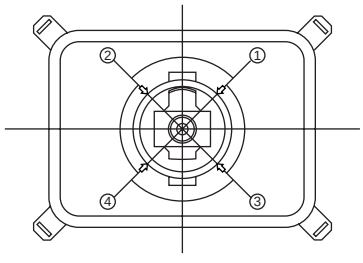

Insert the DY wedges
at the possible ①～④.

H-V adjustment

- For this adjustment, receive a crosshatch pattern, check whether adjustment is required or not, and then adjust.
  This unit is equipped with a “16:9 mode” which identifies the input from S-video input and switches automatically to 16:9 screen size for the full mode (squeeze signal) from a video camera or DVD. (Surface broadcasts remain “4:3”.)
  16:9 mode also requires adjustment. Please perform adjustment on the following basis.
  The adjustment procedure is the same as for 4:3 mode.

Adjustment \ Screen mode	4:3	16:9
1. V-HET (vertical amplitude)	[3F]	[3F]
2. V-LIN (vertical lilnearity)	○	※2
3. V-SCR (vertical S-shape compensation)	○	※2
4. V-POS (vertical position)	○	●
5. H-WID (horizontal amplitude)	○	●
6. H-POS (horizontal position)	○	※1
7. H-PIN (vertical pin level)	○	●

Adjustment \ Screen mode	4:3	16:9
8. H-KEY (vertical pin keystone distortion)	○	●
9. H-TPN (top pincushion) H-BPN (bottom pincushion)	○	※2
10. V-EHT (vertical amplitude compensation)	[04]	[04]
11. H-EHT (horizontal amplitude compensation)	[06]	[06]
12. V-BKU (top vertical blanking)	—	●
13. V-BKD (bottom vertical blanking)	—	●

※1 Set to the 4:3 adjustment value.
※2 Confirm and adjust if required.

● Adjust with 16:9.

•Adjustment locations other than the remote control

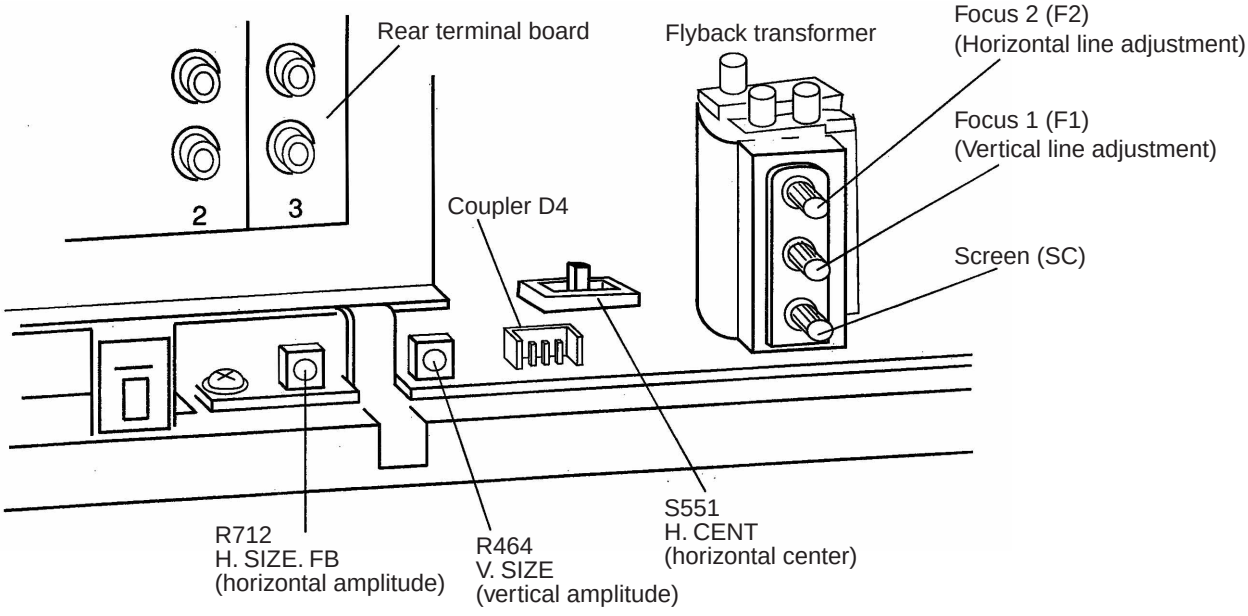

4:3 mode adjustment

1. Amplitude compensation adjustment	
Adjustment jig	Digital tester
Measuring location	Coupler D2, pin ① +, pin ③ -
Adjustment location	Rester completely black
Input signal	————————

1. Set the item video in the menu **[功能設定] (Function setting)** to **[オフ] (OFF)**. (Completely black screen)
2. Connect the pin ① of the coupler D2 with the ⊕ side of the digital tester, and connect the pin ③ with the ⊖ side.
3. Turn R712 (amplitude FB) on the board [D] and adjust to 4.0V ± 0.1V.
4. Set the item video in the menu **[功能設定] (Function setting)** to **[オン] (ON)**.

2. Vertical adjustment	Purpose: Adjustment of amplitude and linearity of the image in vertical direction.

Adjustment jig	Color pattern generator
Meassuring location	TV screen (visual observation)
Adjustment location	Remote control buttons [VOL +/-]
Input signal	Crosshatch pattern

※ Adjustment conditions

Image adjustment	Standard
Image menu	Image 4 (dynamic)

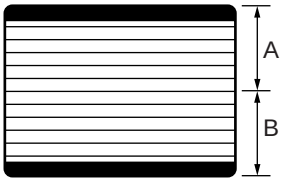

A=B

Vertical position adjustment

1. Set the item [H-V 調整] (H-V adjustment) (omitted in the following) to [V-HET].
2. Adjust with the remote control buttons [VOL +/-] to a narrower vertical amplitude and confirm the vertical center of the image (crosshatch pattern).
3. Set to the item [V-POS].
4. Adjust with the remote control buttons [VOL +/-] so that the vertical center of the crosshatch pattern comes to the center of the screen.

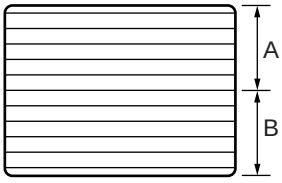

A=B=5.5 lines

Vertical amplitude adjustment

5. Set to the item [V-HET], set to "3F", and adjust by turning R464 so that the number of horizontal lines of the crosshatch pattern becomes 5.5 lines at the top and at the bottom.

• Caution items

For adjustment of V-HET, keep "3F" fixed and adjust by turning R464. However, when adjustment of the vertical amplitude with R464 is not possible, adjust the value for [V-HET] in the range from 3A to 44 (hexadecimal).

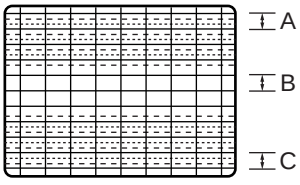

A=B=C

Vertical linearity adjustment

6. Set to the item [V-LIN].
7. Adjust with the remote control buttons [VOL +/-] so that the interval between the lines of the upper half and the lower half of the crosshatch pattern becomes uniform.

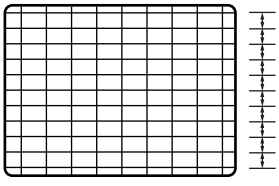

Vertical S-shape compensation adjustment

8. Set to the item [V-SCR].
9. Adjust with the remote control buttons [VOL +/-] so that the grid size of the crosshatch pattern becomes the same at the center and at the top and the bottom.
10. Perform the adjustments 6. to 9. alternately until the line interval between the straight lines becomes uniform.

3. Horizontal adjustment	Purpose: Adjustment of amplitude and linearity of the image in horizontal direction.

Adjustment jig	Color pattern generator
Meassuring location	TV screen (visual observation)
Adjustment location	Remote control buttons [VOL +/-]
Input signal	Crosshatch pattern

※ Adjustment conditions

Image adjustment	Standard
Image menu	Image 4 (dynamic)

Set S551 (H. CENT) to the center.

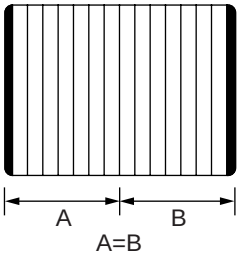

Horizontal position adjustment

1. Set to the item [H-WID], narrow the horizontal amplitude with the remote control buttons [VOL +/-], and confirm the horizontal center.
2. Set to the item [H-POS].
3. Adjust with remote control buttons [VOL +/-] so that the horizontal center of the crosshatch pattern comes to the center of the screen.

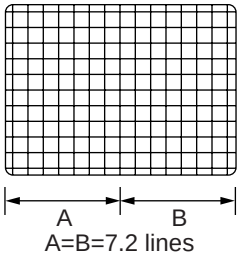

Horizontal amplitude adjustment

4. Return to the item [H-WID].
5. Adjust with the remote control buttons [VOL +/-] so that the number of vertical lines of the crosshatch pattern on the left and on the right becomes 7.2 lines each.

• Caution items

Horizontal linearity confirmation and setting
- Confirm that the horizontal linearity is not unbalanced.
- If it is unbalabced, switch S551 (H. CENT) and set to the best position.
  a. When the right side of the screen is shrunk, set S551 to the side of the termianl board, and when the left side of the screen is shrunk, set S551 to the side of the flyback transformer.
  b. When the balance is not too bad, leave S551 at the center.
  c. When S551 is not set at the center, perform horizontal position adjustment for 4:3 mode and for 16:9 mode.

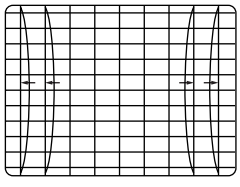

Horizontal pincushion compensation adjustment

6. Set to the item [H-PIN].
7. Adjust with the remote control buttons [VOL +/-] so that the vertical lines on teh outside of the crossshatch pattern become straight lines.

H-TPN
(top pincushion compensation) adjustment

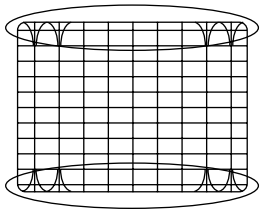

Upper and lower pincushion compensation adjustment

8. Set to the item [H-TPN].
9. Adjust with the remote control buttons [VOL +/-] so that the lines in the upper part of the crosshatch pattern becomes straight lines.
10. Set to the item [H-BPN].
11. Adjust with the lower part of the crosshatch pattern becomes straight lines.

H-BPN
(bottom pincushion compensation) adjustment

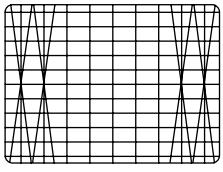

Keystone compensation adjustment

12. Set to the item [H-KEY].
13. Adjust with the remote control buttons [VOL +/-] so that thevertical lines on the outside of the crosshatch pattern becomme straight lines.

※ The vertical position changes when [H-KEY] is adjusted. Confirm [V-POS] and adjust if required.

14. Adjust the items 6. to 13. alternately until the vertical lines of the crosshatch pattern become vertical.

16:9 mode adjustment

The adjustment procedure is the same as for 4:3 mode.

1. H-V adjustment procedure for 16:9 mode	Purpose: Adjustment for 16:9 mode
Adjustment jig	Color pattern generator
Meassuring location	TV screen (visual observation)
Adjustment location	Remote control buttons [VOL +/-]
Input signal	Crosshatch pattern

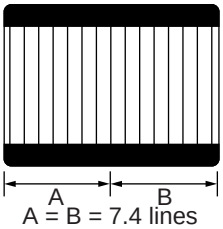

A = B = 7.4 lines

Fig. 1

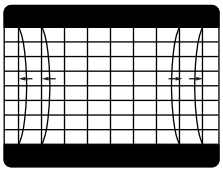

Fig. 2

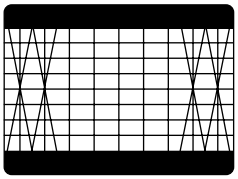

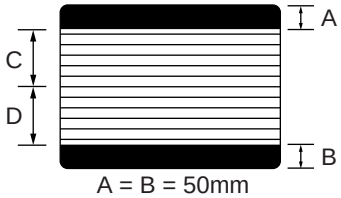

A = B = 50mm
C = D = 5.1 lines

1. Receive a crosshatch pattern, enter into H-V adjustment mode, and press the [ASPECT] button in the remote contorl operation section twice to set to "16:9" mode.
2. Set to adjustment values for V-HET, H-POS, V-EHT and H-EHT to the same vlaues as for the 4:3 mode.
3. Adjust H-WID.
   Adjust the left and right vertical lines of the crosshatch pattern to 7.4 lines each.
4. Adjust V-POS, H-PIN (Fig. 1) and H-KEY (Fig. 2).
5. Adjust the upper and lower blanking width with V-BKU and V-BKD to 50mm.
6. Confirm V-LIN and V-SCR and adjust if required.

White balance adjustment

1. Preparatory adjustment	Purpose: Facilitation of white balance adjustment.
Adjustment jig	Color pattern generator
Meassuring location	————————
Input signal	Studio color bar

※1: At the time of adjustment, the color signal is cut to facilitate white balance adjustment.

1. Establish the required conditions for white balance adjustment according to the following table.

Image menu		Image 4 (dynamic) Color temperature (high) Screen mode 4:3 NR OFF Power consumption - Standard
Image adjustment	Color darkness	[0] (center)
	Hue	
	Black level	
	Picture	[+30] (Max.)
調整 (Service adjustment mode)	Service adjustment item [色の濃さ] (Color darkness) ※1	[00] Make a note of the value before adjustment
	R-CUT	[00] Min. value
	G-CUT	[7F] center value
	B-CUT	[00] Min. value
	R-DRV	[00] Min. value
	B-DRV	
Screen volume		Min. (left side)

2. Sub-brightness adjustment	
Adjustment jig	Color pattern generator Oscilloscope
Meassuring location	TP47G (board [A])
Adjustment location	Remote control buttons [VOL +/-]
Input signal	Studio color bar

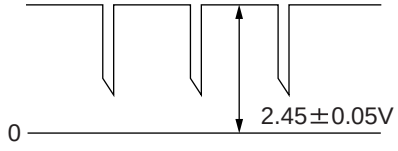

1. Receive a studio color bar.
2. Set to item [S-BRT] of the adjustment mode [HW 調整] (WB adjustment).
3. Press the remote control button "⑤" and make the screen one horizontal line.
4. Adjust with the remote control buttons [VOL +/-] so that the waveform fo TP47G (board [A]) becomes DC2.45 ± 0.05V.
5. Adjust the upper and lower blanking width with V-BKU and V-BKD to 50mm.
6. Press the remote control button "⑤" to cancel one horizontal line.

3. White balance adjustment	Purpose: Optimizing the white balance (back and white) for the image.
Adjustment jig	Color pattern generator
Meassuring location	TV screen (visual observation)
Input signal	Studio color bar

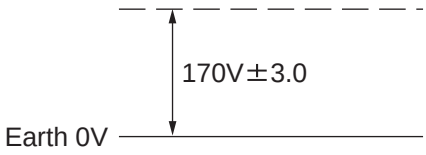

※ The items "1. Preparatory adjustment" and "2. Sub-brightness adjustment" must have been executed.

1. Set to the item [G-CUT] of the adjustment mode [WB 調整] (WB adjustment) and switch the input selector to video or similar for no input.
   (In the following, the adjustment mode will be omitted in the explanations.)
2. Press the remote control button "⑤" and make the screen one horizontal line.

※ For selection of a different adjustment item, press the button "⑤" again for cancellation.

3. Connect the oscilloscope probe to TPL7 of the picture tube board [L], and adjust with the remote control buttons [VOL +/-] so that the waveform level against earth becomes DC170V ± 3.0 as shown in the following figure.
4. Turn the screen volume gradually to the right and adjust so that green just starts to shine.
5. Set to the item [R-CUT] of [WB 調整] (WB adjustment).
6. Adjust with the remote control buttons [VOL +/-] so that red becomes as bright as green and yellow is obtained.
7. Set to the item [B-CUT] of [WB 調整] (WB adjustment).
8. Adjust with the remote control buttons [VOL +/-] so that blue becomes as bright as green and white is obtained.
9. Turn the screen volume gradually to the left to where the three color horizontal line disappears.
10. Press the remote control button "⑤" to cancel the horizontal line.
11. Receive a studio color bar and either shift the fine adjustment of the TV or use the chroma cut of the color pattern generator to obtain a block-and-white screen.
    If the screen is greenish, repeat the adjustment 4. to 10..
12. If the black-and-white screen is reddish, select the item [R-DRV] of [WB 調整] (WB adjustment), and if it is bluish, select the item [B-DRV], and then adjust with the remote control buttons [VOL +/-] so that a normal black-and-white screen is obtained.
    Adjust [R-DRV] and [B-DRV] alternately to obtain the best condition.

Confirmation

- Cancel the service maintenance mode.
- Select [黒レベル] (Black level) of the menu [影像調整] (Image adjustment), change the level, and confirm that a normal black-and-white screen is obtained. Also confirm the screen brightness for all channels.
  - ・When the screenn is too bright (black floats) or too dark (black is subdued), use the remote control buttons [VOL +/-] to adjust the item [S-BRT] of [WB 調整] (WB adjustment).

  ※When a normal screen is not obtained, repeat the adjustments 1. to 12..

13. Return the item [色の濃さ] (Color darkness) of [サブ調整] (Sub-adjustment) to the recorded value.

※ If the TV fine adjustment has been shifted, return it to the original setting.

Focus adjustment

1. Focus adjustment	
Adjustment jig	Color pattern generator
Measuring location	TV screen (visual observation)
Input signal	Crosshatch pattern

※ Adjustment conditions

Image adjustment	Black level	"0" Center
	Picture	"+30" Maximum

- Set GR to "ON". (Refer to page 10 in the Service Manual.)

1. Receive a crosshatch pattern.
2. Adjust Focus 1 so that the thickness of the vertical line ⑧ in the figure on the left becomes a minimum.
3. Adjust Focus 2 so that the horizontal line thickness at the intersection of the vertical line ⑧ and the horizontal line ⑥ becomes a minimum.
4. Confirm that the focus at the center and at the outer circumference is balanced. In case of bad balance, repeat the adjustments 2. and 3..

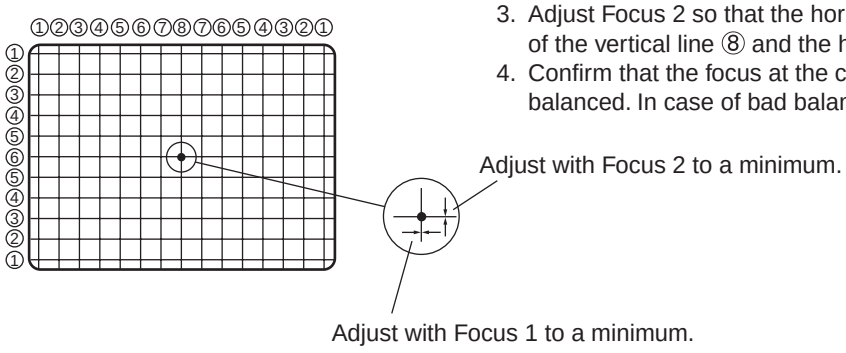

Adjustment after board exchange

Adjustment after [DF] DAF board exchange

1. DAF Phase Adjustment	
Adjustment jig	Color pattern generator
Measuring location	TV screen (visual observation)
Adjustment location	DAF board [DF], R1577
Input signal	Crosshatch pattern

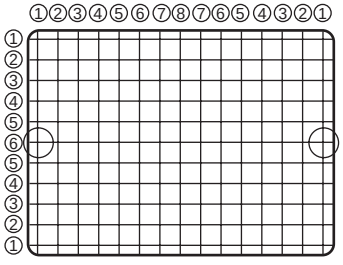

1. Receive a crosshatch pattern
2. Use Focus 2 to adjust the center to underfocussed condition.
3. Adjust R1577 on the DAF board [DF] so that the left-right balance of the intersection of the horizontal line ⑥ and the vertical lines ① becomes equal.
4. Perform focus adjustment.

Adjustment after exchange of the video signal processing board [AG]

1. Contrast Adjustment	
Adjustment jig	Color pattern generator Oscilloscope
Meassuring location	TP47G (board [A]) Board [A], coupler [A31], pin 2
Adjustment location	Remote control buttons [VOL +/-]
Input signal	Studio color bar

※ Adjustment conditions

Image menu	Dynamic	
Image adjustment	Picture	Maximum (+30)
	Black level	Center (0)
	Sharpness	Center (+10)

1. Make the following setting in service maintenance mode.
   At this time, record the original values.

サブ調整 (Sub-adjustment)	黒レベル (Black level)	2F
WB 調整 (WB adjustment)	G-CUT	7F

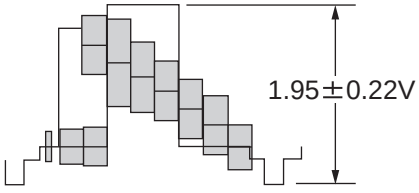

2. Connect TPD2 of board [D] and TP02 of board [A] to earth.
3. Receive a studio color bar.
4. Confirm that the video signal at pin ② of the coupler A31 of board [A] is 1.95 ± 0.22V.
5. Select the item [ピクチャー] (PICTURE) of [サブ調整] (Sub-adjustment) in service maintenance mode (omitted in the following).

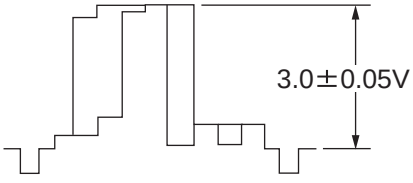

6. Adjust with the remote control buttons [VOL +/-] so that the signal at TP47G of board [A] becomes 3.0 ± 0.05V.
   Next, set the value to 35 steps (hexadecimal) below this adjustment value. (Press the remote control button [VOL -] 335 times.)
7. Confirm that there is no shrinkage of the waveform. If there is, select the item [黒レベル] (Black level) of [サブ調整] (Sub-adjustment) and correct with the remote control buttons [VOL +/-].
8. Return the adjustment value for [G-CUT] of "WB sub-adjustment" to the original value.
   Next, perform "2. Color Output, Hue Adjustment".
   If "2. Color Output, Hue Adjustment" is not to be performed, go to the following step 9..

9. Remove the earth from TPD2 of board [D] and TP02 of board [A].

2. Color Output, Hue Adjustment	
Adjustment jig	Color pattern generator Oscilloscope
Measuring location	Board [A], TP47G, TP47R
Input signal	Rainbow color pattern

Performed after "1. Contrast Adjustment".

※ Adjustment conditions

Image menu	Dynamic	
Image adjustment	Color darkness	Center (0)
	Hue	Center (0)
	Picture	Maximum (+30)
	Black level	Center (0)

1. Make the following setting in service maintenance mode.
   At this time, record the original values.

サブ調整 (Sub-adjustment)	色の濃さ (Color darkness)	1F
	色あい (Hue)	1F
	黒レベル (Black level)	1F
WB 調整 (WB adjustment)	G-CUT	7F

Fig. 1: TP47R

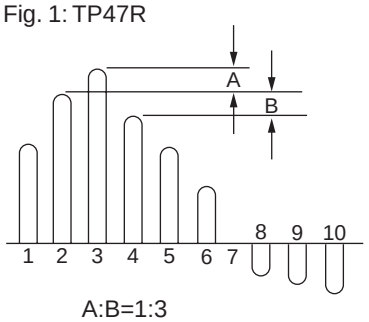

A:B=1:3

Fig. 2: TP47G

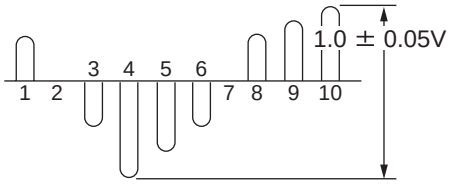

2. Confirm that TPD2 of board [D] and TP02 of board [A] are connected to earth.
3. Receive a rainbow color bar.
4. Select the item [色あい] (Hue) of [サブ調整] (Sub-adjustment) and adjust the remote control buttons [VOL +/-] so that the signal phase at TP47R of board [A] becomes A:B = 1:3 as shown in the figure on the left. At this time, record the adjustment value.
5. Select the item [色の濃さ] (Color darkness) of [サブ調整] (Sub-adjustment) and adjust the remote control buttons [VOL +/-] so that the signal level at TP47G of board [A] (Fig. 2) becomes 1.0 ± 0.05V. Next, set the value to 20 steps (hexadecimal) below this adjustment value. (Press the remote control button [VOL -] 20 times.)
6. Select the item [色あい] (Hue) of [サブ調整] (Sub-adjustment) and set to a value 20 steps (hexadesimal) below the recorded value. (Press the remote control button [VOL -] 20times.)
7. Disconnect TPD2 of board [D] and TP02 of board [A] from earth.

Geomagnetic adjustment (TC-33P10N only)

1. Geomagnetic adjustment	
Adjustment jig	Demagnetizer DC voltage meter
Measuring location	Board [GM], TPGM1 (Pin 1,2)
Input signal	

1. Demagnetize the GM-Board around its preimeter with the Demagnetizer.
2. Set to control;
   GEOMAGNETIC SENSOR ..... ON
3. Connect a DC voltage meter to TPGM1-2pin (GM-Board).
4. Adjust the R4863 (GM-Board) so that the Vx Out at TPGM1-2pin becomes 4.55 ± 0.05V.
5. Connect a DC voltage meter to TPGM1-1pin (GM-Board).
6. Adjust the R4861 (GM-Board) so that the Vy Out at TPG1-1pin becomes 4.75 ± 0.05V.

Memo

Schematic Diagram

Important Safety Notice

Components identified by ⚠ mark have special characteristics important for safety.
When replacing any of these components, use only manufacture's specified parts.

Notes:

1. **Resistor**
   All resistors are cabon 1/4W resistor, unless marked as follows:
   Unit of resistance is OHM [Ω] (K=1,000, M=1,000,000).
   ○ : Nonflammable ⊠ : Metal Oxide
   △ : Solid ◎ : Metal Film
   ⧄ : Wire Wound ⊗ : Fuse:
2. **Capacitor**
   All capacitors are ceramic 50V capacitor, unless marked as follows:
   Unit of capacitance is μF, unless otherwise noted.
   ⊗ : Temperature Compensation + : Electrolytic
   Ⓜ : Polyester NP : Bipolar
   ⓜ : Metalized Polyester Ⓣ : Dipped Tantalum
   ⊠ : Polypropylene Ⓩ : Z-Type
3. Coil
   Unit of inductance is μF, unless otherwise noted.
4. Test Point
   ⚲ : Test Point position
5. Earth Symbol
   ⏚ : Chassis Earth (Cold) ⊥ : Line Earth (Hot)
6. Voltage Measurement
   Voltage is measured by a DC voltmeter.
   Conditions of the measurement are the following:
   Power Source ..... AC 100V, 60Hz
   Receiving Signal ..... Colour Bar signal (RF)
   All customer's controls ..... Maximum positions
7. Number in red circle indicates waveform nember.
   (See waveform pattern table.)
8. When arrow mark (↗) is found, connection is easily found from the direction of arrow
9. Indicates the major signal flow. : Video ➡ Audio ⇨
10. This schematic diagram is the latest at the time of printing and subject to change without notice.

Remarks:

1. The Power Circuit contains a circuit area which uses a separate power supply to isolate the earth connection.
   The circuit is defined by HOT and COLD indications in the schematic diagram. Take the follwing precautions.
   All circuits, except the Power Circuit, are cold.
   Precautions
   a. Do not touch the hot part or the hot and cold parts at the same time or you may be shocked.
   b. Do not short- circuit the hot and cold circuits or a fuse may blow and parts may break.
   c. Do not connect an instrument, such as an oscilloscope, to the hot and cold circuits simultaneously or a fuse may blow.
   Connect the earth of instruments to the earth connection of the circuit being measured.
   d. Make sure to disconnect the power plug before removing the chassis.
2. Following diodes are interchangeable.
   MA150- MA162 (Replacement part)

Remote Control Transmitter TNQE196

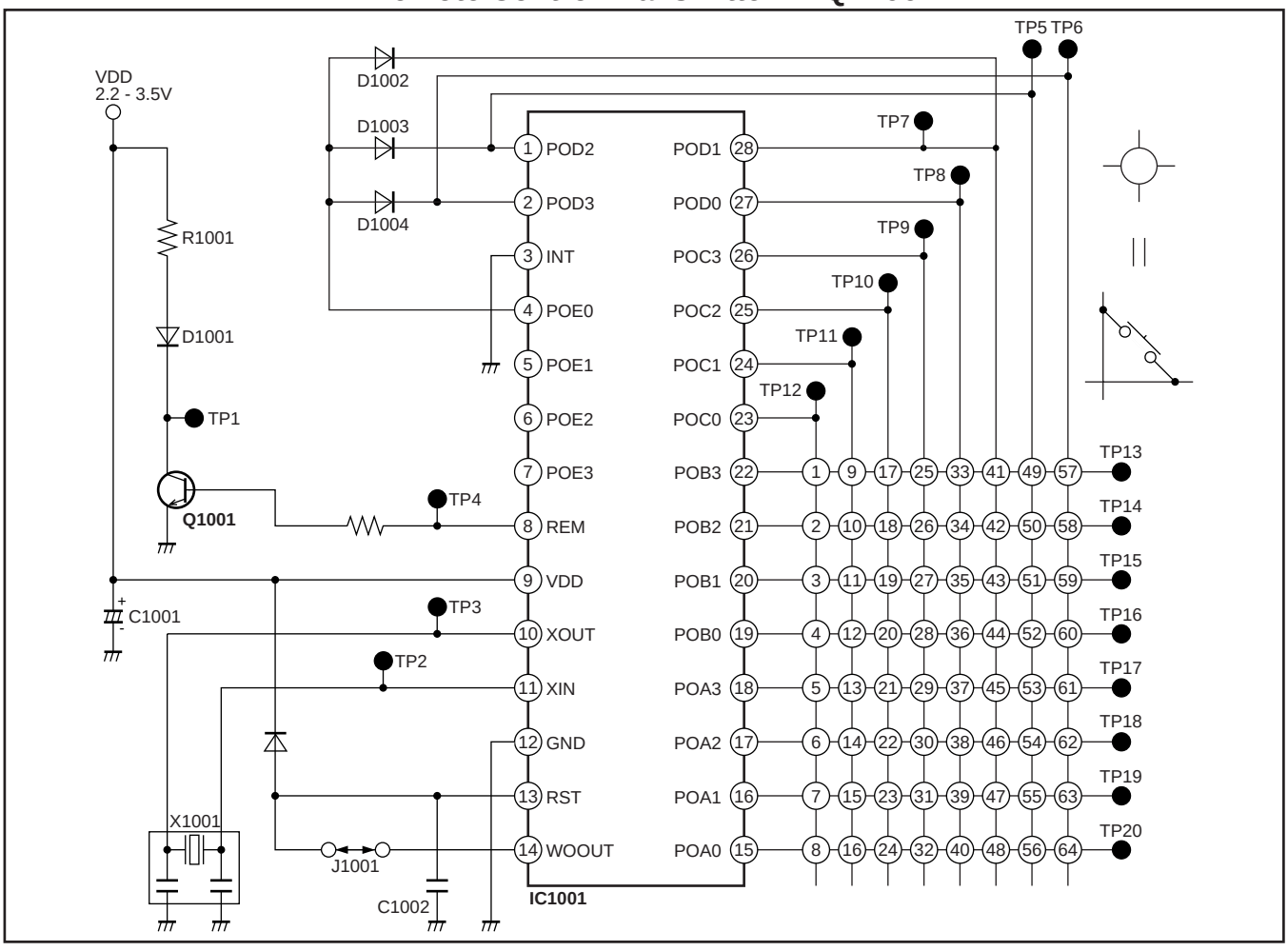

Key Function Table

Key No.	Function	Key No.	Function	Key No.	Function
1	MUTE	23	MAIN MENU	45	INDEX
2	SURROUND	24	4	46	HOLD
3	TV/AV	25	9	47	STEREO
4	VCR/LD:REW	26	8	48	D. PNR
5	VCR/LD:STOP	27	VOL. UP	49	CHANGE
6	VCR/LD:FF	28	N (NORMAL)	50	STROBE
7	VCR/LD:PLAY	29	▶	51	PIP ACTION
8	VCR/LD-POWER ON/OFF	30	VCR-CH UP/LD-SKIP +	52	TIME TEXT
9	3	31	◀	53	REVEAL
10	2	32	7	54	F/T/B/
11	POS. UP	33	2 DIGIT	55	E.P.
12	LD FUNCTION	34	0	56	P.AI
13	VCR:ADVANCE/LD:DISC A	35	VOL. DOWN	57	– – –
14	VCR:REC/LD:DISC B	36	▼	58	– – –
15	VCR FUNCTION	37	PC	59	– – –
16	1	38	VCR:CH DOWN/LD:SKIP -	60	GREEN
17	6	39	OFF TIMER	61	YELLOW
18	5	40	RECALL	62	BLUE
19	POS. DOWN	41	STILL	63	RED
20	▲	42	CH SEARCH	64	POWER/OFF
21	VCR/LD:PAUSE	43	PIP		
22	VCR:REC	44	TV/TEXT		

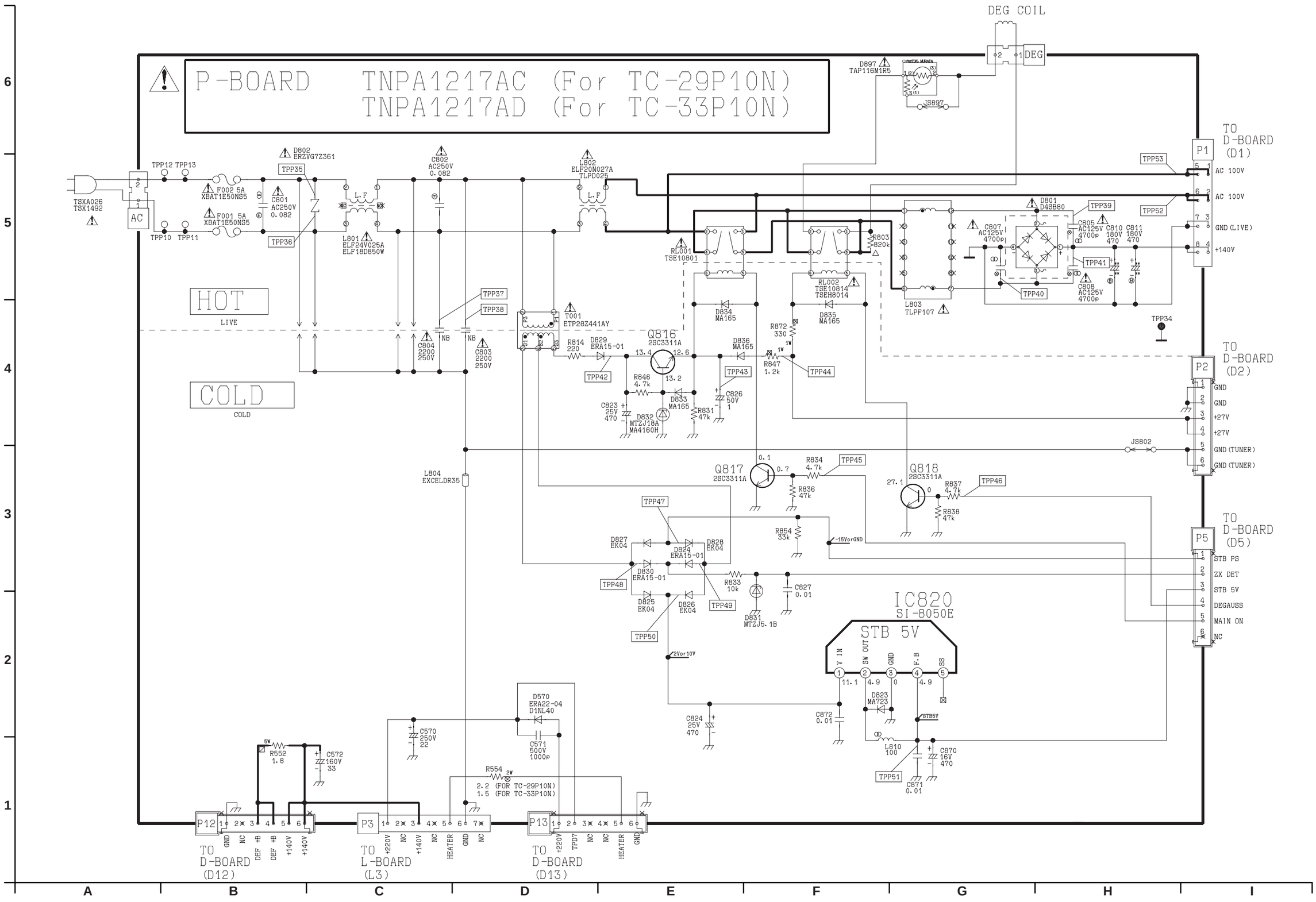
P-BOARD TNPA1217AC (For TC-29P10N)
TNPA1217AD (For TC-33P10N)
DEG COIL
DEG
D897 TAP116M1R5
JS897
TO D-BOARD (D1)
P1
AC 100V
AC 100V
GND (LIVE)
+140V
TPP53
TPP52
TPP39
TPP41
TPP40
TPP34
D801 D4SB80
C805 AC125V 4700p
C810 180V 470
C811 180V 470
C807 AC125V 4700p
C808 AC125V 4700p
L803 TLPF107
R803 820k
RL001 TSE10801
RL002 TSE10814 TSEH8014
D834 MA165
D835 MA165
R872 330
TSXA026 TSX1492
AC
TPP12 TPP13
TPP10 TPP11
F002 5A XBAT1E50NS5
F001 5A XBAT1E50NS5
C801 AC250V 0.082
TPP35
TPP36
D802 ERZVG7Z361
L801 ELF24V025A ELF18D850W
C802 AC250V 0.082
L802 ELF20N027A TLPD025
HOT
LIVE
COLD
COLD
TPP37
TPP38
C804 2200 250V
C803 2200 250V
T001 ETP28Z441AY
R814 220
D829 ERA15-01
TPP42
Q816 2SC3311A
R846 4.7k
D833 MA165
C823 25V 470
D832 MTZJ18A MA4160H
R831 47k
D836 MA165
TPP43
C826 50V 1
R847 1.2k
TPP44
TO D-BOARD (D2)
P2
GND
GND
+27V
+27V
GND (TUNER)
GND (TUNER)
JS802
L804 EXCELDR35
Q817 2SC3311A
R834 4.7k
TPP45
R836 47k
Q818 2SC3311A
R837 4.7k
TPP46
R838 47k
TPP47
D827 EK04
D824 ERA15-01
D828 EK04
D830 ERA15-01
TPP48
D825 EK04
D826 EK04
TPP49
TPP50
R854 33k
-15VorGND
R833 10k
C827 0.01
D831 MTZJ5.1B
TO D-BOARD (D5)
P5
STB PS
ZX DET
STB 5V
DEGAUSS
MAIN ON
NC
IC820 SI-8050E
STB 5V
V IN
SW OUT
GND
F.B
SS
D823 MA723
C824 25V 470
C872 0.01
STB5V
L810 100
C870 16V 470
TPP51
C871 0.01
2VorT0V
D570 ERA22-04 D1NL40
C571 500V 1000p
C570 250V 22
R552 1.8
C572 160V 33
R554 2.2 (FOR TC-29P10N) 1.5 (FOR TC-33P10N)
P12
GND NC DEF +B DEF +B +140V +140V
TO D-BOARD (D12)
P3
+220V NC +140V NC HEATER GND NC
TO L-BOARD (L3)
P13
+220V TPD7 NC NC HEATER GND
TO D-BOARD (D13)

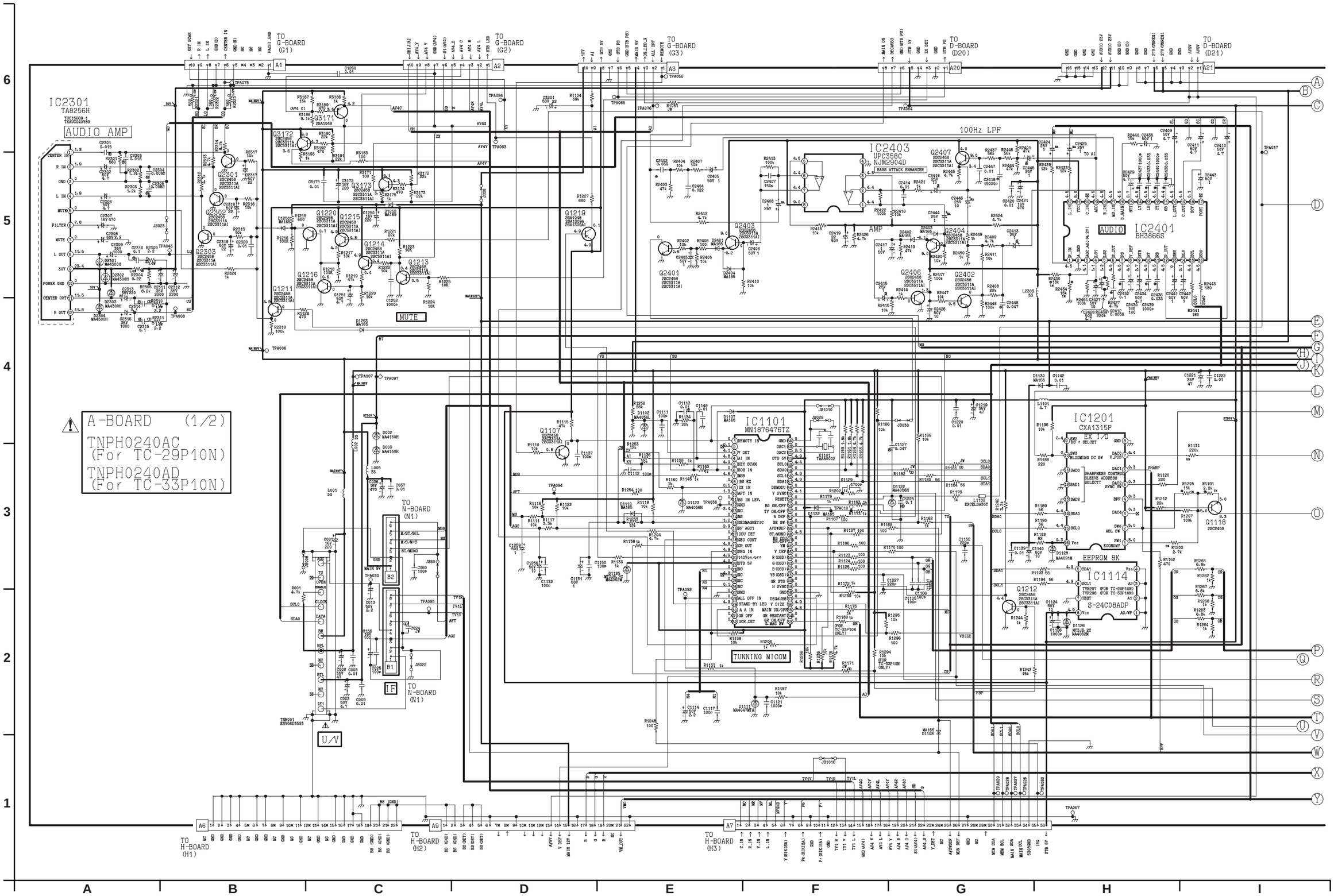
A-BOARD (1/2)
TNPH0240AC
(For TC-29P10N)
TNPH0240AD
(For TC-33P10N)
IC2301
TA8256H
AUDIO AMP
IC2403
UPC358C
NJM2904D
BASS ATTACK ENHANCER
100Hz LPF
AMP
IC2401
BH3866S
AUDIO
MUTE
IC1101
MN1876476TZ
TUNNING MICOM
IC1201
CXA1315P
EX I/O
EEPROM 8K
IC1114
S-24C08ADP
TO G-BOARD (G1)
TO G-BOARD (G2)
TO G-BOARD (G3)
TO D-BOARD (D20)
TO D-BOARD (D21)
TO N-BOARD (N1)
TO H-BOARD (H1)
TO H-BOARD (H2)
TO H-BOARD (H3)

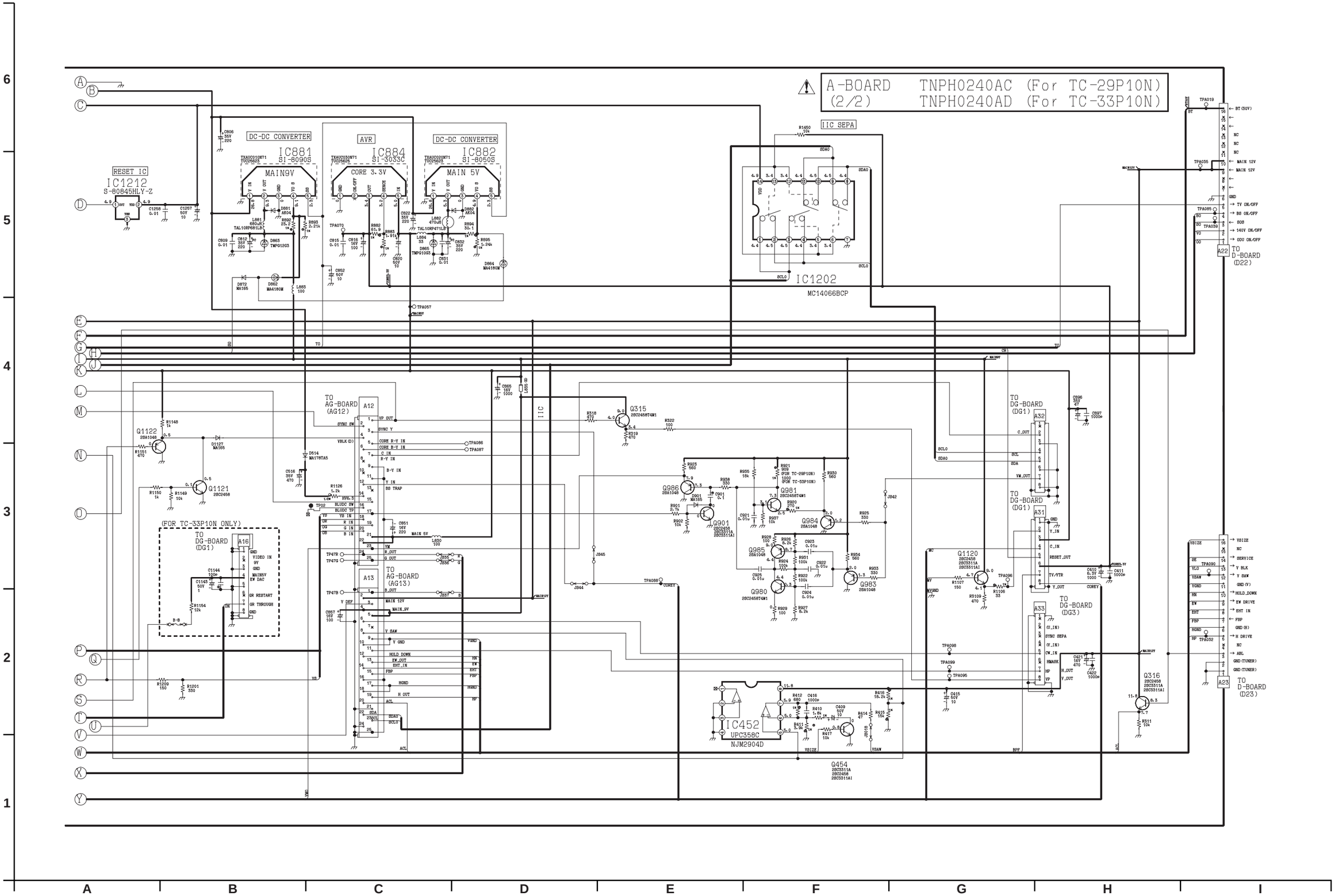
A-BOARD TNPH0240AC (For TC-29P10N)
(2/2) TNPH0240AD (For TC-33P10N)
RESET IC
IC1212
S-80845HLY-Z
DC-DC CONVERTER
IC881
SI-8090S
MAIN9V
AVR
IC884
SI-3033C
CORE 3.3V
DC-DC CONVERTER
IC882
SI-8050S
MAIN 5V
IIC SEPA
IC1202
MC14066BCP
TO D-BOARD (D22)
TO AG-BOARD (AG12)
TO AG-BOARD (AG13)
TO DG-BOARD (DG1)
TO DG-BOARD (DG3)
TO D-BOARD (D23)
(FOR TC-33P10N ONLY)
IC452
UPC358C
NJM2904D
Q454
2SC3311A
2SC2458
2SC3311AI
Q316
2SC2458
2SC3311A
2SC3311AI
Q1120
2SC2458
2SC3311A
2SC3311AI
Q1122
2SA1048
Q1121
2SC2458
Q315
2SC2458T4M1
Q986
2SA1048
Q981
2SC2458T4M1
Q984
2SA1048
Q985
2SA1048
Q980
2SC2458T4M1
Q983
2SA1048
Q901
2SC2458
2SC3311A
2SC3311AI

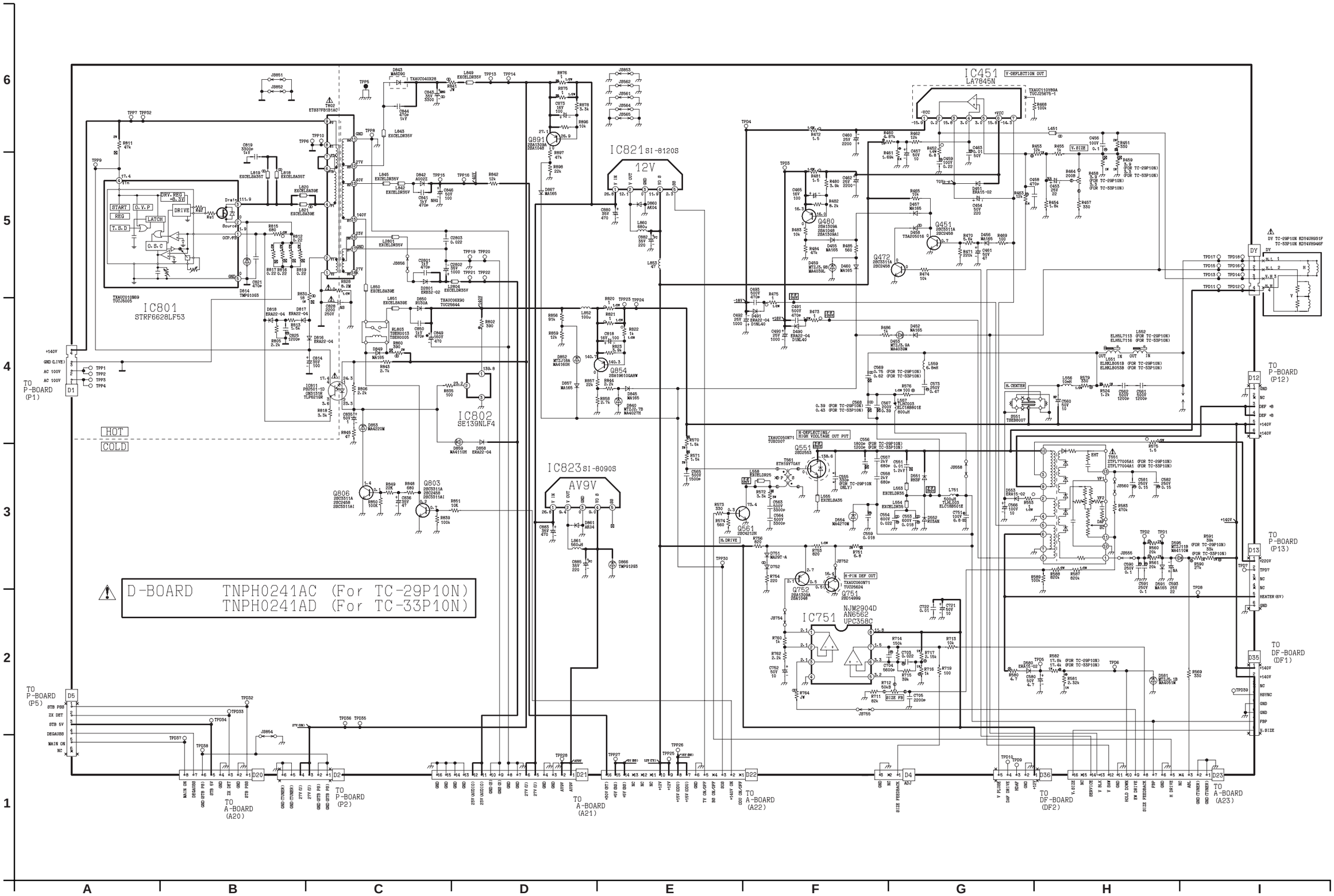
IC801
STRF6628LF53
IC802
SE139NLF4
IC821 SI-8120S
12V
IC823 SI-8090S
AV9V
IC451
LA7845N
V-DEFLECTION OUT
IC751
NJM2904D
AN6562
UPC358C
Q891
Q480
Q451
Q472
Q854
Q551
Q561
Q752
Q754
Q806
Q803
HOT
COLD
D-BOARD TNPH0241AC (For TC-29P10N)
TNPH0241AD (For TC-33P10N)
TO P-BOARD (P1)
TO P-BOARD (P5)
TO P-BOARD (P2)
TO P-BOARD (P12)
TO P-BOARD (P13)
TO DF-BOARD (DF1)
TO DF-BOARD (DF2)
TO A-BOARD (A20)
TO A-BOARD (A21)
TO A-BOARD (A22)
TO A-BOARD (A23)
DY TC-29P10N KDY4UH031F
TC-33P10N KDY4VH046F

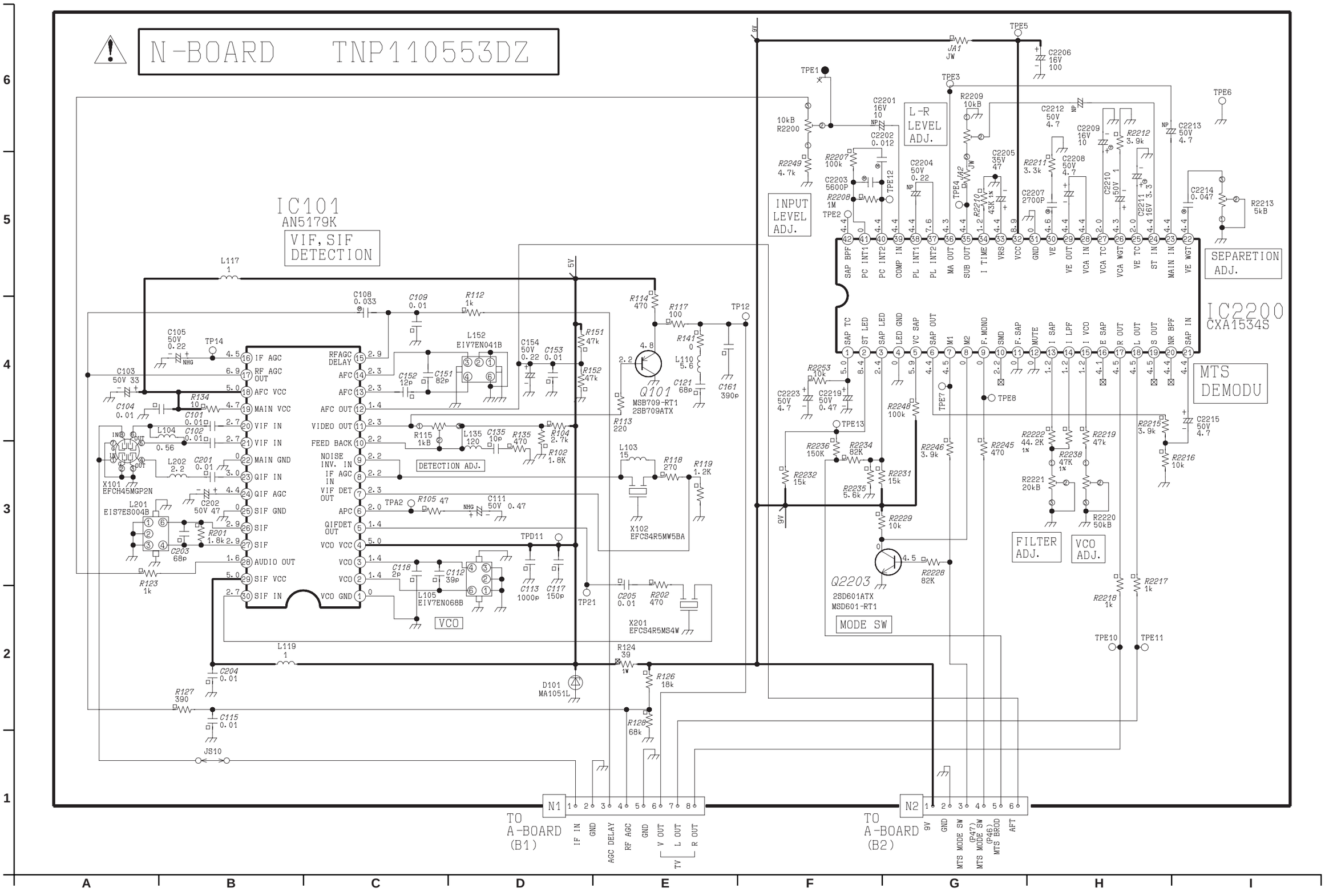
N-BOARD TNP110553DZ
IC101
AN5179K
VIF, SIF DETECTION
IC2200
CXA1534S
SEPARETION ADJ.
MTS DEMODU
INPUT LEVEL ADJ.
L-R LEVEL ADJ.
DETECTION ADJ.
FILTER ADJ.
VCO ADJ.
VCO
MODE SW
Q101
MSB709-RT1
2SB709ATX
Q2203
2SD601ATX
MSD601-RT1
X101
EFCH45MGP2N
X102
EFCS4R5MW5BA
X201
EFCS4R5MS4W
L201
EIS7ES004B
L105
EIV7EN068B
L152
EIV7EN041B
D101
MA1051L
TO A-BOARD (B1)
IF IN
GND
AGC DELAY
RF AGC
GND
V OUT
L OUT
R OUT
TV
TO A-BOARD (B2)
9V
GND
MTS MODE SW (P47)
MTS MODE SW (P46)
MTS BRDD
AFT

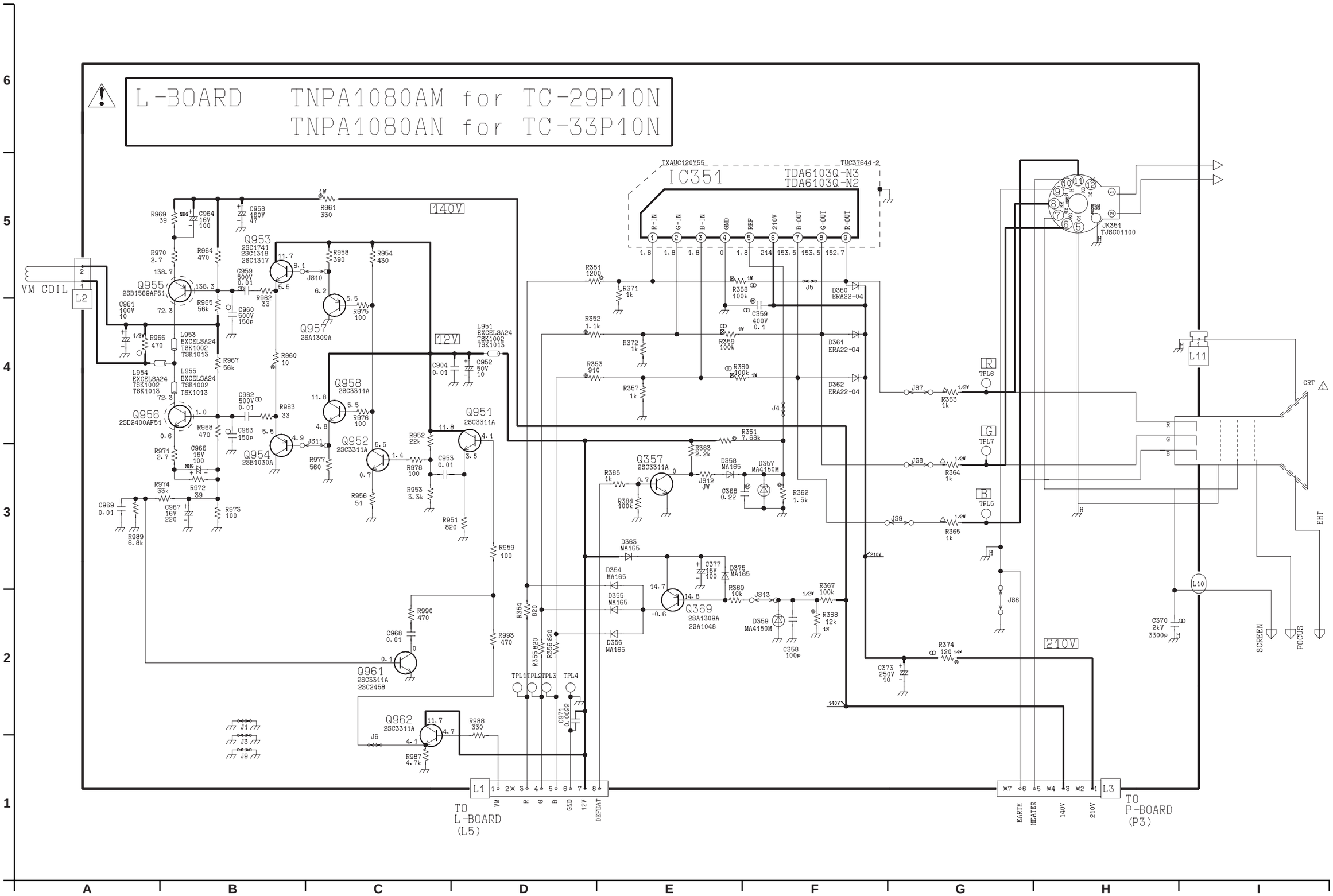
L-BOARD TNPA1080AM for TC-29P10N
TNPA1080AN for TC-33P10N
IC351
TDA6103Q-N3
TDA6103Q-N2
R-IN
G-IN
B-IN
GND
REF
210V
B-OUT
G-OUT
R-OUT
JK351
TJSC01100
VM COIL
L2
140V
12V
210V
Q955
2SB1569AF51
Q956
2SD2400AF51
Q953
2SC1741
2SC1318
2SC1317
Q957
2SA1309A
Q958
2SC3311A
Q954
2SB1030A
Q952
2SC3311A
Q951
2SC3311A
Q357
2SC3311A
Q369
2SA1309A
2SA1048
Q961
2SC3311A
2SC2458
Q962
2SC3311A
L11
L10
CRT
EHT
SCREEN
FOCUS
TO L-BOARD (L5)
VM
R
G
B
GND
12V
DEFEAT
TO P-BOARD (P3)
EARTH
HEATER
140V
210V

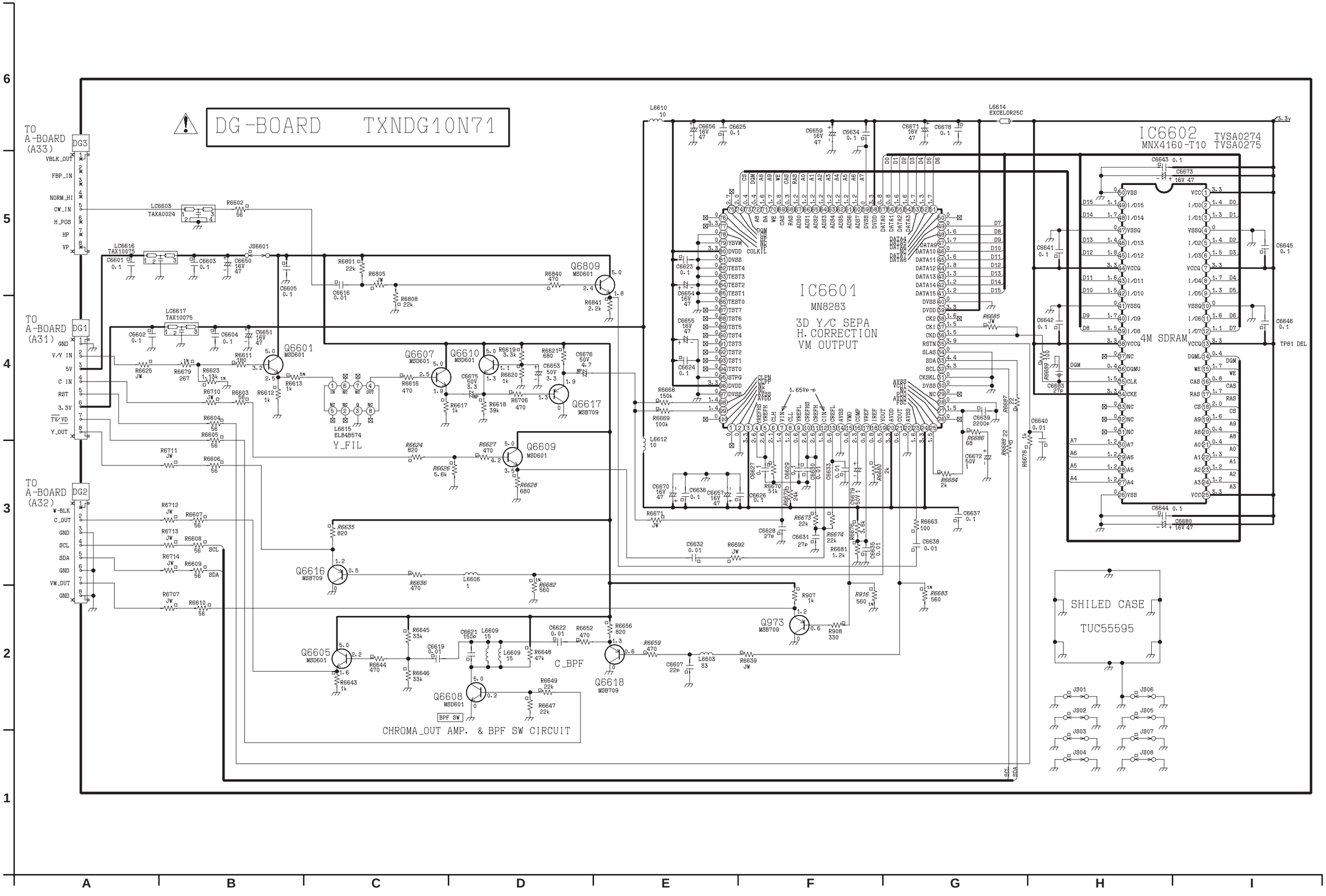
DG-BOARD TXNDG10N71
TO A-BOARD (A33)
TO A-BOARD (A31)
TO A-BOARD (A32)
IC6601
MN8283
3D Y/C SEPA
H.CORRECTION
VM OUTPUT
IC6602
MNX4160-T10
TVSA0274
TVSA0275
4M SDRAM
Y_FIL
C_BPF
CHROMA_OUT AMP. & BPF SW CIRCUIT
SHILED CASE
TUC55595

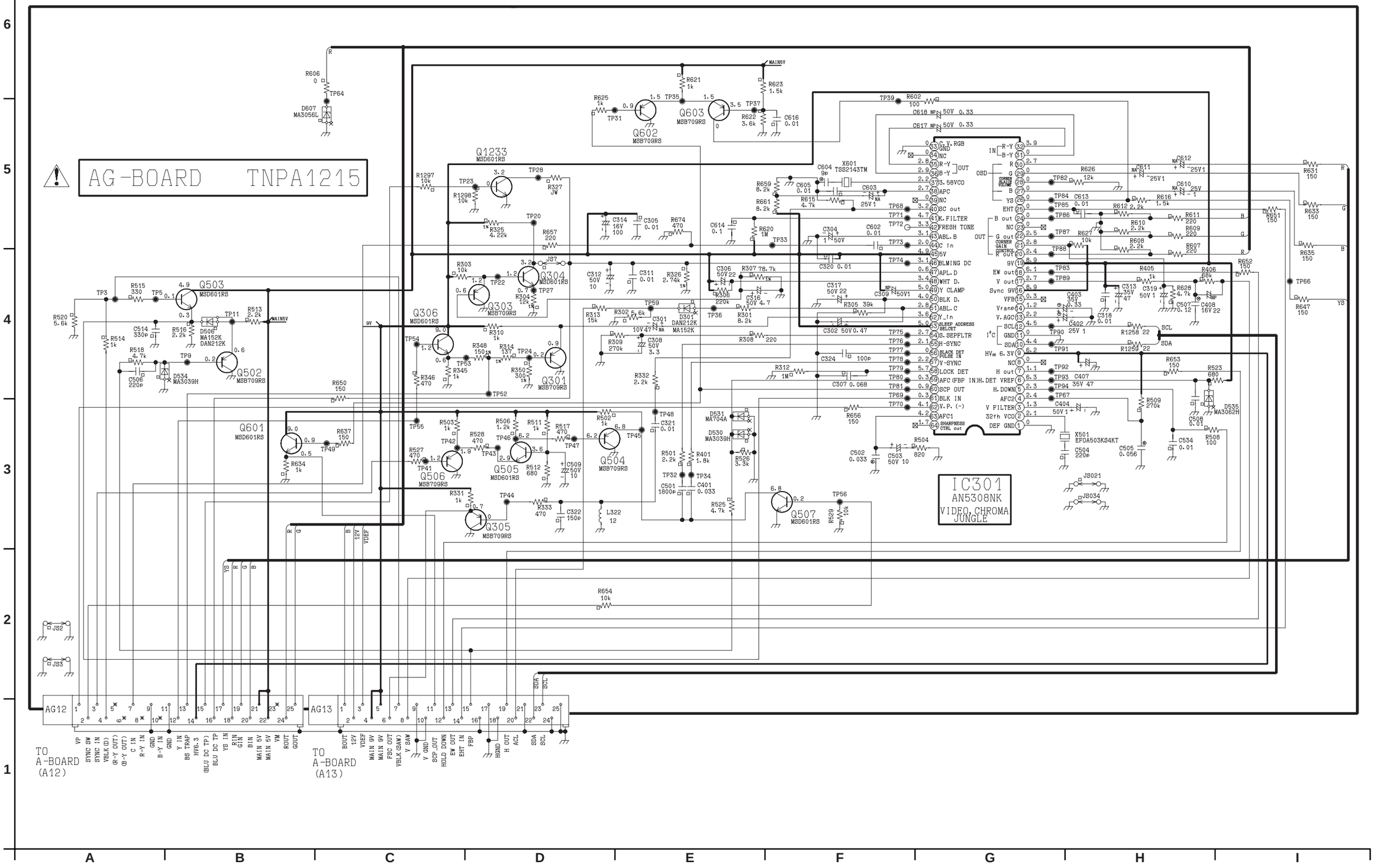
AG-BOARD TNPA1215
IC301
AN5308NK
VIDEO, CHROMA
JUNGLE
X601
TSS2143TM
X501
EFOA503KS4KT
Q503
MSD601RS
Q502
MSB709RS
Q601
MSD601RS
Q1233
MSD601RS
Q304
MSD601RS
Q303
MSB709RS
Q306
MSD601RS
Q301
MSB709RS
Q602
MSB709RS
Q603
MSB709RS
Q505
MSD601RS
Q504
MSB709RS
Q506
MSB709RS
Q305
MSB709RS
Q507
MSD601RS
AG12
AG13
TO
A-BOARD
(A12)
TO
A-BOARD
(A13)

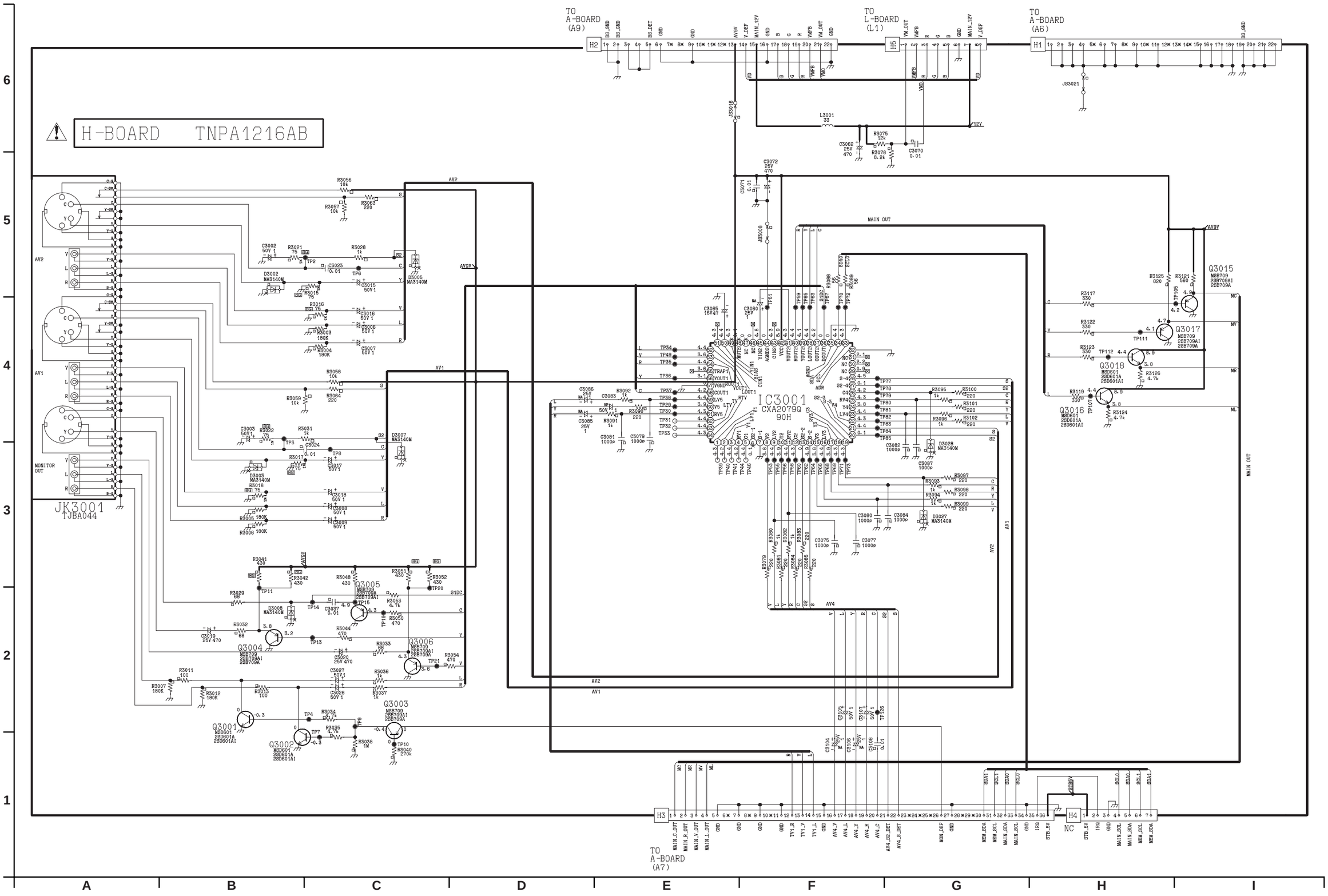
H-BOARD TNPA1216AB
TO A-BOARD (A9)
TO L-BOARD (L1)
TO A-BOARD (A6)
TO A-BOARD (A7)
JK3001
TJBA044
IC3001
CXA2079Q
90H
MAIN OUT
MONITOR OUT
AV1
AV2
AV4
AV5V
12V
STB5V
NC

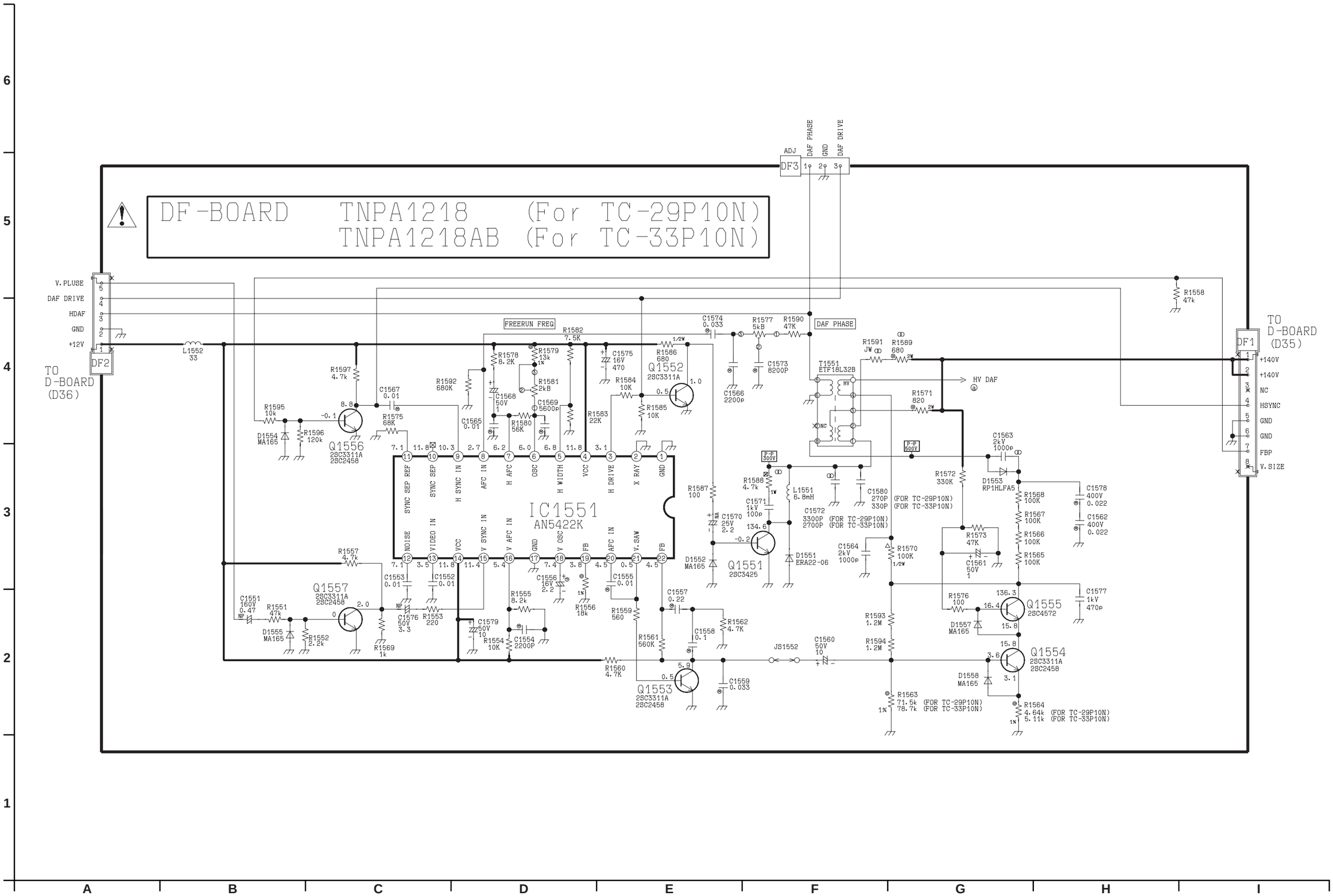
DF-BOARD TNPA1218 (For TC-29P10N)
TNPA1218AB (For TC-33P10N)
TO D-BOARD (D36)
TO D-BOARD (D35)
IC1551
AN5422K
Q1551
Q1552
Q1553
Q1554
Q1555
Q1556
Q1557
DAF PHASE
DAF DRIVE
FREERUN FREQ
HV DAF

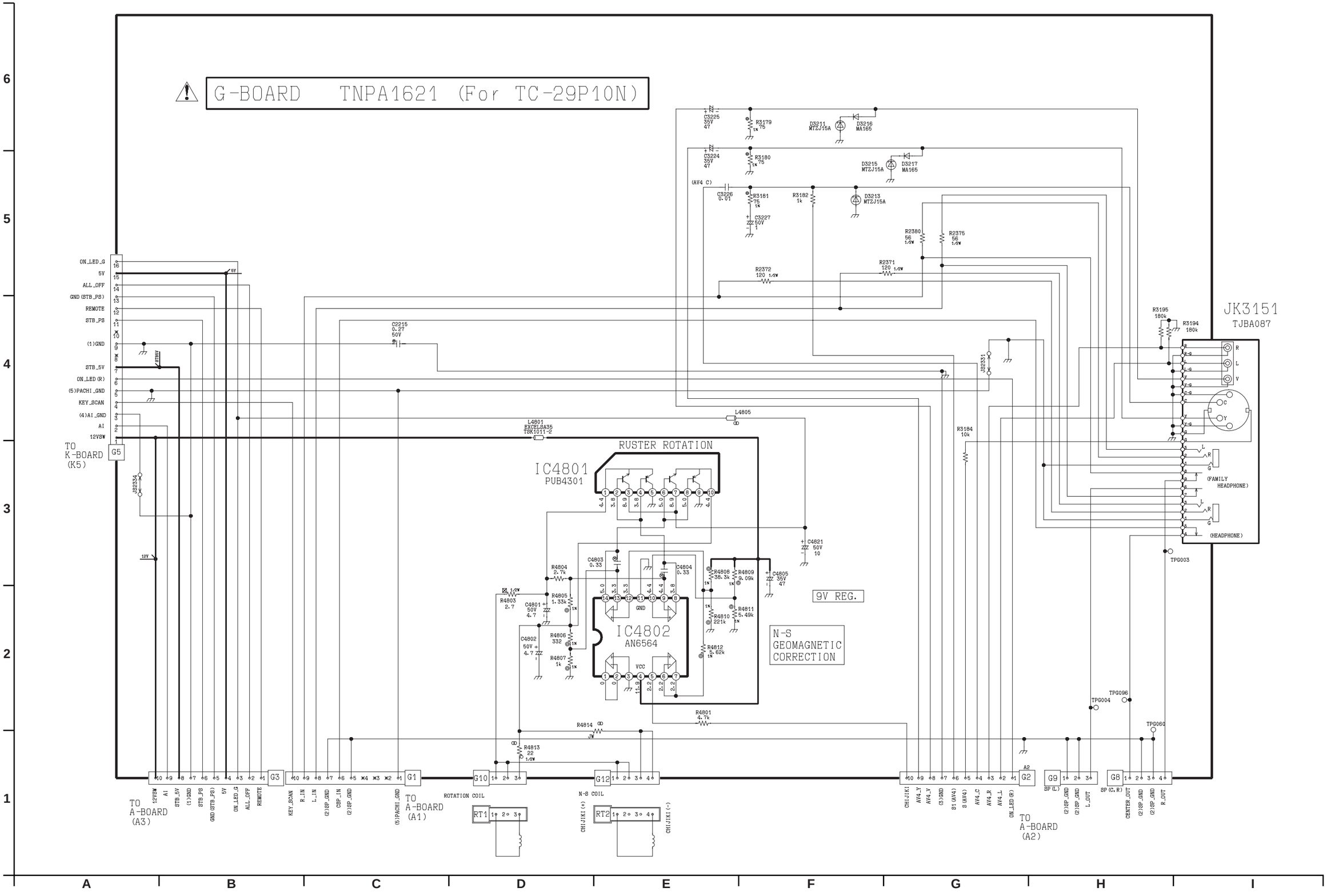
G-BOARD TNPA1621 (For TC-29P10N)
IC4801
PUB4301
RUSTER ROTATION
IC4802
AN6564
N-S
GEOMAGNETIC
CORRECTION
9V REG.
JK3151
TJBA087
(FAMILY
HEADPHONE)
(HEADPHONE)
TO
K-BOARD
(K5)
TO
A-BOARD
(A3)
TO
A-BOARD
(A1)
TO
A-BOARD
(A2)
ROTATION COIL
N-S COIL
ON_LED_G
5V
ALL_OFF
GND(STB_PS)
REMOTE
STB_PS
(1)GND
STB_5V
ON_LED(R)
(5)PACHI_GND
KEY_SCAN
(4)AI_GND
AI
12VSW
12V
L4801
EXCELSA35
TSK1011-2
L4805
C2215
0.27
50V
C3225
35V
47
C3224
35V
47
R3179
75
R3180
75
D3211
MTZJ15A
D3216
MA165
D3215
MTZJ15A
D3217
MA165
(AV4 C)
C3226
0.01
R3181
75
R3182
1k
D3213
MTZJ15A
C3227
50V
1
R2380
56
1/2W
R2375
56
1/2W
R2372
120 1/2W
R2371
120 1/2W
R3195
180k
R3194
180k
R3184
10k
C4821
50V
10
C4805
35V
47
R4804
2.7k
C4803
0.33
C4804
0.33
R4808
38.3k
R4809
9.09k
R4803
2.7
R4805
1.33k
C4801
50V
4.7
R4810
221k
R4811
5.49k
R4806
332
C4802
50V
4.7
R4807
1k
R4812
5.62k
R4801
4.7k
R4814
JW
R4813
22
1/2W
TPG003
TPG004
TPG096
TPG060
RT1
RT2
CHIJIKI(+)
CHIJIKI(-)
12VSW
A1
STB_5V
(1)GND
STB_PS
GND(STB_PS)
5V
ON_LED_G
ALL_OFF
REMOTE
KEY_SCAN
R_IN
L_IN
(2)SP_GND
CSP_IN
(2)SP_GND
(5)PACHI_GND
CHIJIKI
AV4_Y
AV4_V
(3)GND
S1(AV4)
S(AV4)
AV4_C
AV4_R
AV4_L
ON_LED(R)
SP(L)
L_OUT
SP(C,R)
CENTER_OUT
R_OUT

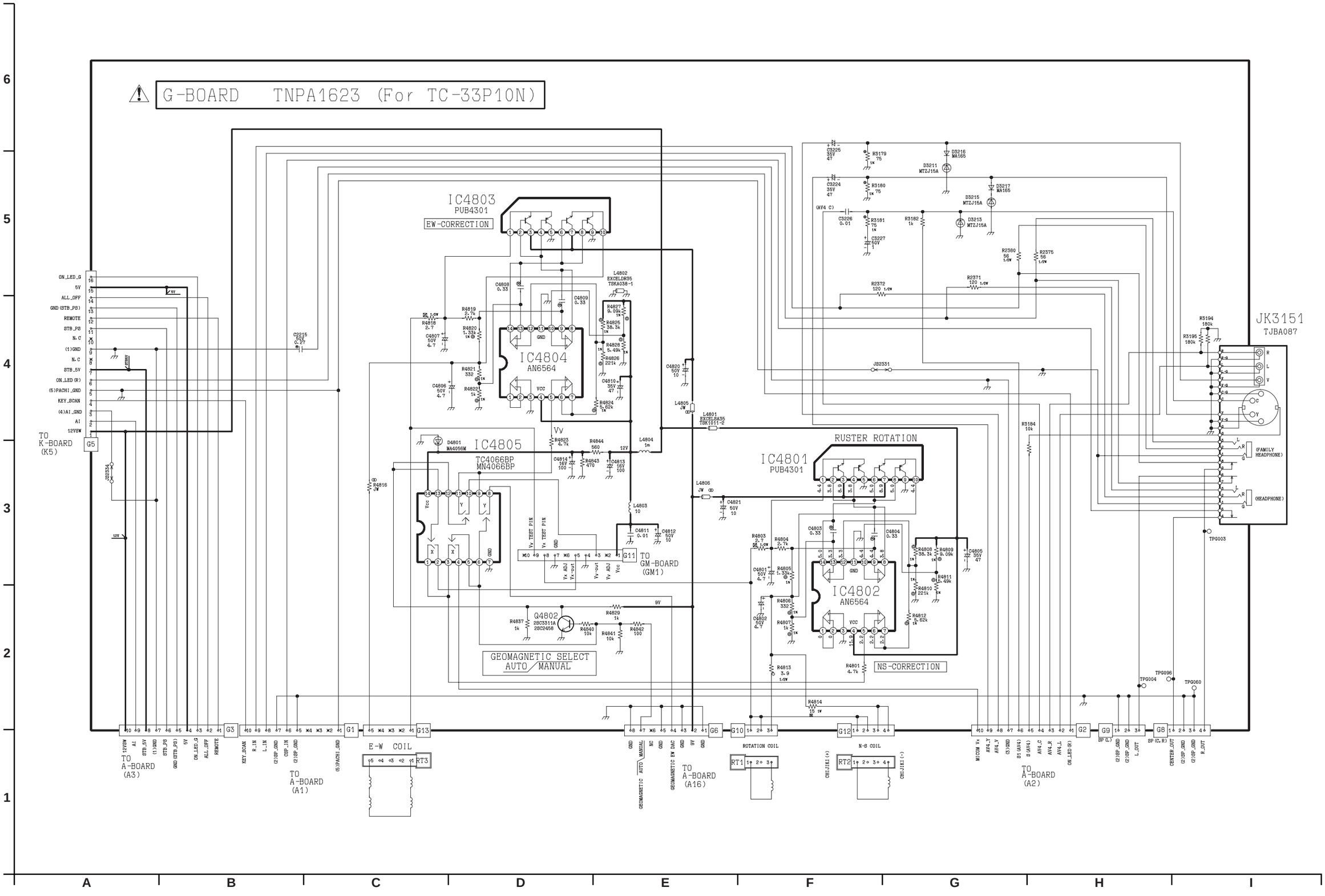
G-BOARD TNPA1623 (For TC-33P10N)
IC4803
PUB4301
EW-CORRECTION
IC4804
AN6564
IC4805
TC4066BP
MN4066BP
IC4801
PUB4301
RUSTER ROTATION
IC4802
AN6564
NS-CORRECTION
Q4802
2SC3311A
2SC2458
GEOMAGNETIC SELECT
AUTO / MANUAL
JK3151
TJBA087
(FAMILY HEADPHONE)
(HEADPHONE)
TO K-BOARD (K5)
TO GM-BOARD (GM1)
TO A-BOARD (A3)
TO A-BOARD (A1)
TO A-BOARD (A16)
TO A-BOARD (A2)
E-W COIL
ROTATION COIL
N-S COIL
A
B
C
D
E
F
G
H
I

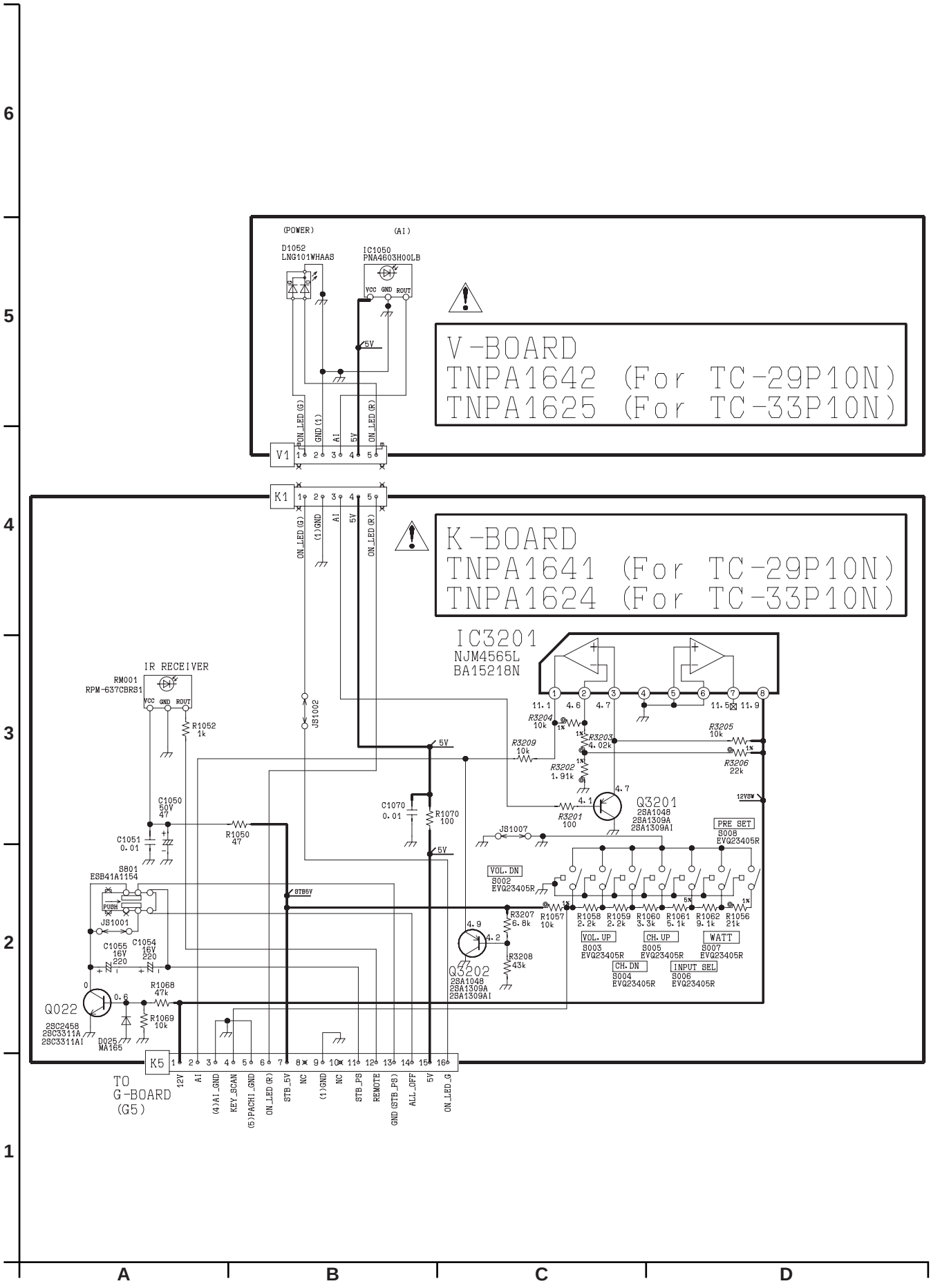
V-BOARD
TNPA1642 (For TC-29P10N)
TNPA1625 (For TC-33P10N)
K-BOARD
TNPA1641 (For TC-29P10N)
TNPA1624 (For TC-33P10N)
(POWER)
(AI)
D1052
LNG101WHAAS
IC1050
PNA4603H00LB
IC3201
NJM4565L
BA15218N
IR RECEIVER
RM001
RPM-637CBRS1
Q3201
2SA1048
2SA1309A
2SA1309AI
Q3202
2SA1048
2SA1309A
2SA1309AI
Q022
2SC2458
2SC3311A
2SC3311AI
PRE SET
VOL. DN
VOL. UP
CH. UP
WATT
CH. DN
INPUT SEL
TO
G-BOARD
(G5)

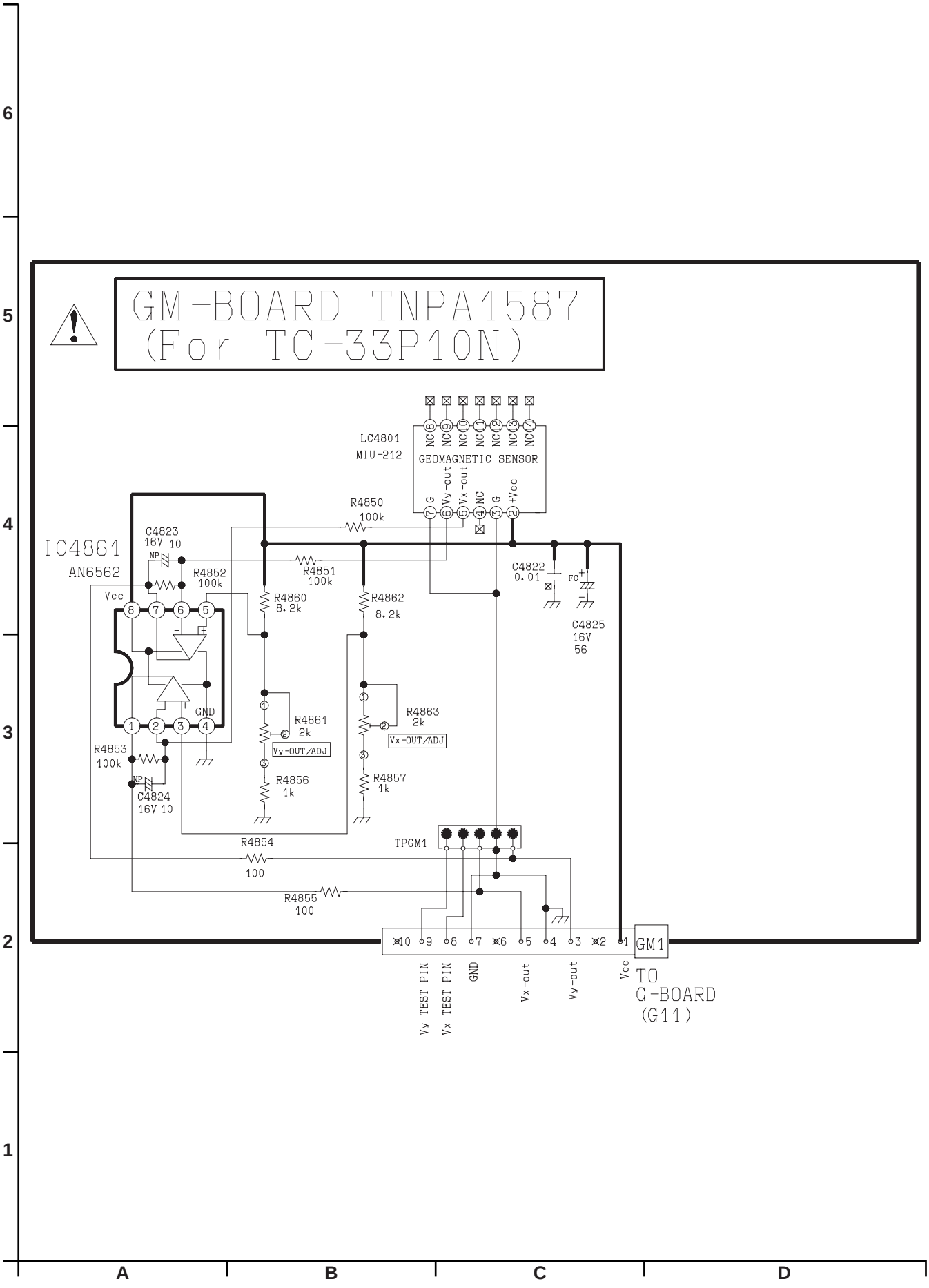
GM-BOARD TNPA1587
(For TC-33P10N)
LC4801
MIU-212
GEOMAGNETIC SENSOR
NC8
NC9
NC10
NC11
NC12
NC13
NC14
G
Vy-out
Vx-out
NC
G
+Vcc
R4850
100k
IC4861
AN6562
C4823
16V 10
NP
R4852
100k
R4851
100k
Vcc
R4860
8.2k
R4862
8.2k
C4822
0.01
FC
C4825
16V
56
GND
R4861
2k
Vy-OUT/ADJ
R4863
2k
Vx-OUT/ADJ
R4853
100k
NP
C4824
16V 10
R4856
1k
R4857
1k
R4854
100
TPGM1
R4855
100
GM1
Vy TEST PIN
Vx TEST PIN
GND
Vx-out
Vy-out
Vcc
TO
G-BOARD
(G11)

PARTS LOCATION &
MECHANICAL REPLACEMENT PARTS LIST

Note: The number on mechanical parts indicates Ref. No. Mechanical Replacement Parts List.

- **Front View**

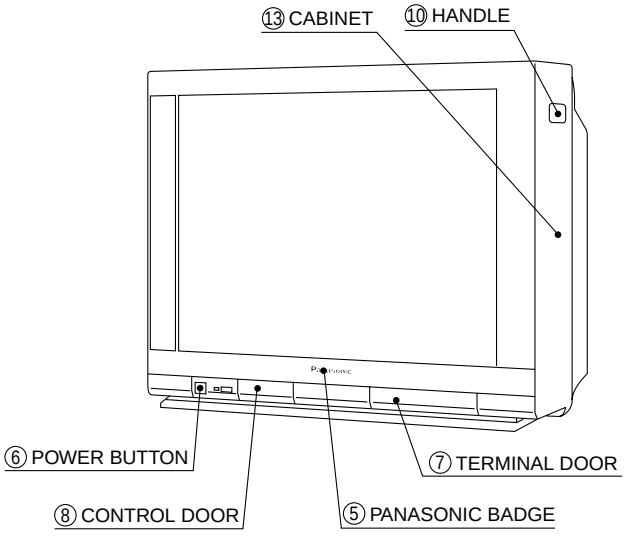

- **Rear View**

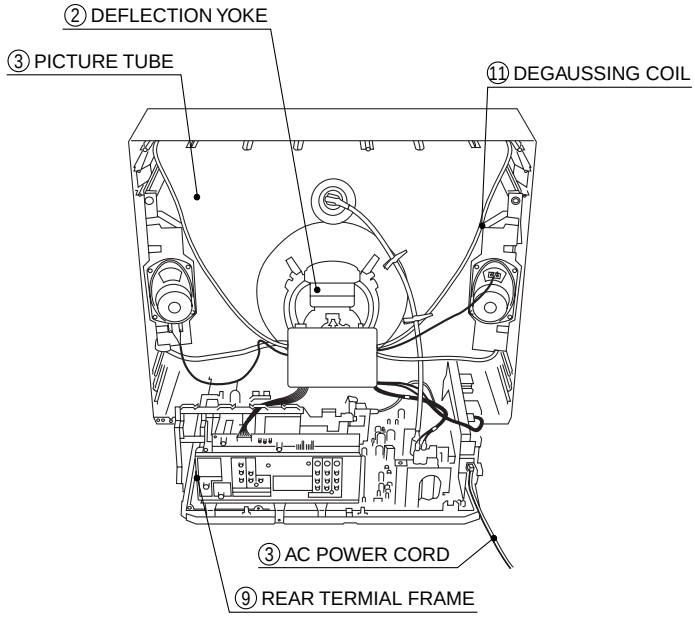

- **Chassis Board Layout View**

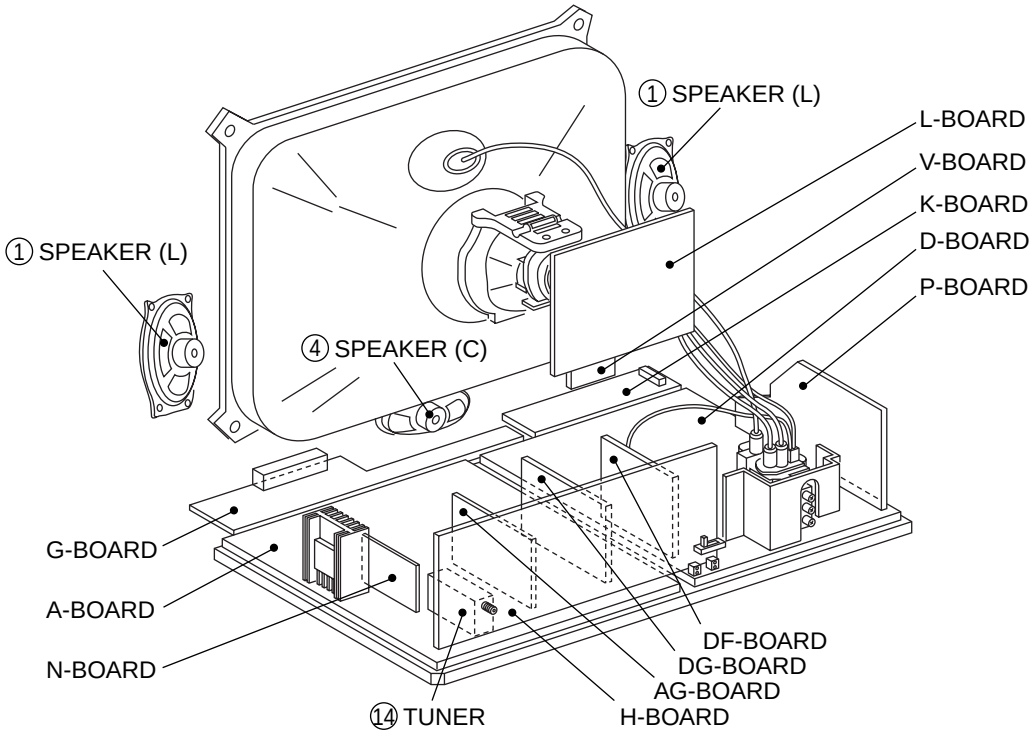

	Ref. No	Part No.	Description
		MECHANICAL PARTS	
	1	EAS12D149B	SPEAKER(L,R)
△	2	KDY4VH946F	DEFLECTION YOKE
△	3	M68LQL185X	PICTURE TUBE (FOR TC-29P10N)
△	3	M79LQM185X	PICTURE TUBE (FOR TC-33P10N)
	4	TASA0004	SPEAKER(C)
		TBLG3019	CUSHION RUBBER (FRONT)
		TBLG3020	CUSHION RUBBER (REAR)
△	5	TBMA059	PANASONIC BADGE
△		TBMD599	MODEL NAME PLATE (FOR TC-29P10N)
		TBMD598	MODEL NAME PLATE (FOR TC-33P10N)
	6	TBXA20002	POWER BUTTON
		TEK6940	DOOR SWITCH
		TESA031	SPRING
		TES1603	COIL SPRING
		TES2249	SPRING
		THTA006Z	SCREW
		THTF004Y	SCREW
		THT1062	SCREW
		TJSX00900	ADAPTOR
		TKKL5092	FOCUS COVER (FOR TC-33P10N ONLY)
		TKK169796	AC CORD COVER
	7	TKPA28403	TERMINAL DOOR
	8	TKPA28503	CONTROL DOOR
		TKPA28604	INDICATOR PANEL
	9	TKP15A3525	REAR TERMINAL FRAME
	10	TKRA14103	HANDLE
		TMK15943	INSULATOR
		TMME015	CLAMPER
		TMME047	CLAMPER
		TMME055	CLAMPER
		TMMJ031	CUSHION (RUBBER)
		TMMJ032	DY WEDGE
		TMM25403	CLAMPER
		TMM6428-1	CLAMPER
		TMM6463-1	CLAMPER
		TMWA014	FRONT BRACKET (FOR TC-29P10N)
		TMWA015	FRONT BRACKET (FOR TC-33P10N)
		TMWJ002	SPACER
		TMWJ011	LED HOLDER
		TMXA026-1	PRINT HOLDER
		TNQE189	TRANSMITTER
△		TPCA67615	CAPTON BOX (FOR TC-29P10N)
△		TPCA68806	CARTON BOX (FOR TC-33P10N)
		TPDA0281-1	CUSHION(UPPER) (FOR TC-29P10N)
		TPDA0282-2	CUSHION(BOTTOM) (FOR TC-29P10N)
		TPDA0283-1	CUSHION (UPPER) (FOR TC-33P10N)
		TPDA0284-1	CUSHION (BOTTOM) (FOR TC-33P10N)
		TPDJ0028	BOTTOM CUSHION (FOR TC-29P10N)
		TPDJ0029	BOTTOM CUSHION (FOR TC-33P10N)
		TPE114107-1	SET COVER (FOR TC-29P10N)
		TPE114108-1	SET COVER (FOR TC-33P10N)
		TPE114123	PROTECT COVER (FOR TC-29P10N)
		TPE114125	PROTECT COVER (FOR TC-33P10N)
△		TQBC0183	INSTRUCTION BOOK
		TSM10032-3	MAGNET
		TSN63115-4	MAGNET
△	11	TSPA107	DEGAUSSING COIL (FOR TC-29P10N)
△	11	TSPA108	DEGAUSSING COIL (FOR TC-33P10N)
		TSPF014	CORRECTION COIL
△	12	TSX1492	AC POWER CORD
		TTUA0297-1	REAR COVER (FOR TC-29P10N)

	Ref. No	Part No.	Description
		TTUA0298	REAR COVER (FOR TC-33P10N)
		TTXA0022	SPEAKER HORN (FOR TC-29P10N)
		TTXA0023	SPEAKER HORN (FOR TC-33P10N)
		TTXA0025	PRINT BOARD STOPPER (FOR TC-33P10N ONLY)
		TTYA0351	CABINET (FOR TC-29P10N)
	13	TTYA0357	CABINET (FOR TC-33P10N)
		TUAA02101E	CHASSIS GUIDE
		XTB4+15A	SCREW
		XTB4+15AFZ	SCREW
		XTW3+12T	SCREW
		XTW4+Z15D	SCREW
		XZBT6506	POLY BAG
		RPM-637CBRS1	REMOTE CONTROL RECIVER (RM001)
△	14	ENV56D35G3	TUNER(TNR001)

Replacement Parts List

Important Safety Notice

Components identified by ⚠ mark have special characteristics important for safety.
When replacing any of these components, use only manufacturer's specified parts.

RTL (Retention Time Limited)

Note: The marking (RTL) indicates that the Retention Time is Limited for this item.
After the discontinuation of this assembly in production, the item will continue to be available for a specific period of time. The retention period of availability is dependant on the type of assembly, and in accordance with the laws governing part and product retention. After the end of this period, the assembly will no longer be available.

Abbreviation of part name and description

1. Resistor

Example:

ERD25TJ104 C 100KOHM, J, 1/4W

Type Allowance

2. Capacitor

Example:

ECKF1H103ZF C 0.01UF, Z, 50V

Type Allowance

Type	Allowance
C : Carbon F : Fuse M : Metal Oxide Metal Film S : Solid W : Wire Wound	F : ±1% G : ±2% J : ±5% K : ±10% M : ±20%

Type	Allowance
C : Ceramic E : Electrolitic P : Polyester Polypropylene T : Tantalum	C : ±0.25pF D : ±0.5pF F : ±1pF G : ±3pF J : ±5pF K : ±10pF L : ±15pF M : ±20pF P : +100%, -0% Z : +80%, -20%

Ref. No	Part No.	Description
	INTEGRATED CIRCUITS	
IC101	AN5179K	LINEAR IC
IC301	AN5308NK	LINEAR IC
IC351	TDA6103Q-N3	LINEAR IC
IC451	LA7845N	LINEAR IC
IC452	UPC358C	LINEAR IC
IC751	NJM2904D	LINEAR IC
IC801	STRF6628LF53	IC
IC802	SE139N	LINEAR IC
△ IC811	0N3131-R	PHOTO COUPLER
IC820	SI-8050E	HYBRID IC
IC821	SI-8120S	HYBRID IC
IC823	SI-8090S	HYBRID IC
IC881	SI-8090S	HYBRID IC
IC882	SI-8050S	HYBRID IC
IC884	SI-3033C	HYBRID IC
IC1050	PNA4603H00LB	PHOTO IC
IC1101	MN1876476TZ	MOS IC (8BIT)
IC1114	TVRJ297	MOS IS (EEP ROM) (FOR TC-29P10N)
IC1114	TVRJ298	MOS IC (EEP ROM) (FOR TC-33P10N)
IC1201	CXA1315P	LINEAR IC
IC1202	MC14066BCP	MOS IC (LOGIC)
IC1212	S-80845HLY-Z	IC
IC1551	AN5422K	LINEAR IC
IC2200	CXA1534S	LINEAR IC
IC2301	TA8256H	LINEAR IC
IC2401	BH3866S	LINEAR IC
IC2403	UPC358C	LINEAR IC
IC3001	CXA2079Q	LINEAR IC
IC3201	NJM4565L	LINEAR IC
IC4801	PUB4301	TRANSISTOR ARRAY
IC4802	AN6564	LINEAR IC
IC4803	PUB4301	TRANSISTOR ARRAY (FOR TC-33P10N ONLY)
IC4804	AN6564	LINEAR IC (FOR TC-33P10N ONLY)
IC4805	TC4066BP	MOS IC (CMOS S/LOGIC) (FOR TC-33P10N ONLY)
IC4861	AN6562	LINEAR IC (FOR TC-33P10N ONLY)
IC6601	MN8283	MOS IC
IC6602	TVSA0274	IC
	TRANSISTORS	
Q022	2SC3311A	TRANSISTOR
Q101	2SB709A	TRANSISTOR
Q301	2SB709A	TRANSISTOR
Q303	2SB709A	TRANSISTOR
Q304	2SD601A	TRANSISTOR
Q305	2SB709A	TRANSISTOR
Q306	2SD601A	TRANSISTOR
Q315	2SC3311A	TRANSISTOR
Q316	2SC3311A	TRANSISTOR
Q357	2SC3311A	TRANSISTOR
Q369	2SA1309A	TRANSISTOR
Q451	2SC3311A	TRANSISTOR
Q454	2SC3311A	TRANSISTOR
Q472	2SC3311A	TRANSISTOR
Q480	2SA1309A	TRANSISTOR
Q502	2SB709A	TRANSISTOR
Q503	2SD601A	TRANSISTOR
Q504	2SB709A	TRANSISTOR
Q505	2SD601A	TRANSISTOR
Q506	2SB709A	TRANSISTOR
Q507	2SD601A	TRANSISTOR
Q551	2SD2553LBMA	TRANSISTOR
Q561	2SC4212H	TRANSISTOR
Q601	2SD601A	TRANSISTOR
Q602	2SB709A	TRANSISTOR

Ref. No	Part No.	Description
Q603	2SB709A	TRANSISTOR
Q751	2SD1499	TRANSISTOR
Q752	2SA1309A	TRANSISTOR
Q803	2SC3311A	TRANSISTOR
Q806	2SC3311A	TRANSISTOR
Q816	2SC3311A	TRANSISTOR
Q817	2SC3311A	TRANSISTOR
Q818	2SC3311A	TRANSISTOR
Q854	2SA19610Q0HW	TRANSISTOR
Q891	2SA1309A	TRANSISTOR
Q901	2SC3311A	TRANSISTOR
Q951	2SC3311A	TRANSISTOR
Q952	2SC3311A	TRANSISTOR
Q953	2SC1741A	TRANSISTOR
Q954	2SB1030A	TRANSISTOR
Q955	2SB1569A	TRANSISTOR
Q956	2SD2400A	TRANSISTOR
Q957	2SA1309A	TRANSISTOR
Q958	2SC3311A	TRANSISTOR
Q961	2SC3311A	TRANSISTOR
Q962	2SC3311A	TRANSISTOR
Q973	2SB709A	TRANSISTOR
Q980	2SC3311A	TRANSISTOR
Q981	2SC3311A	TRANSISTOR
Q983	2SA1309A	TRANSISTOR
Q984	2SA1309A	TRANSISTOR
Q985	2SA1309A	TRANSISTOR
Q986	2SA1309A	TRANSISTOR
Q1107	2SC3311A	TRANSISTOR
Q1118	2SC3311A	TRANSISTOR
Q1120	2SC3311A	TRANSISTOR
Q1121	2SC3311A	TRANSISTOR
Q1122	2SA1309A	TRANSISTOR
Q1211	2SC3311A	TRANSISTOR
Q1212	2SC3311A	TRANSISTOR
Q1213	2SC3311A	TRANSISTOR
Q1214	2SC3311A	TRANSISTOR
Q1215	2SC3311A	TRANSISTOR
Q1216	2SC3311A	TRANSISTOR
Q1219	2SA1309A	TRANSISTOR
Q1220	2SC3311A	TRANSISTOR
Q1233	2SD601A	TRANSISTOR
Q1551	2SC3425RLMAT	TRANSISTOR
Q1552	2SC3311A	TRANSISTOR
Q1553	2SC3311A	TRANSISTOR
Q1554	2SC3311A	TRANSISTOR
Q1555	2SC4572	TRANSISTOR
Q1556	2SC3311A	TRANSISTOR
Q1557	2SC3311A	TRANSISTOR
Q2203	2SD601A	TRANSISTOR
Q2301	2SC3311A	TRANSISTOR
Q2302	2SC3311A	TRANSISTOR
Q2303	2SC3311A	TRANSISTOR
Q2401	2SC3311A	TRANSISTOR
Q2402	2SC3311A	TRANSISTOR
Q2403	2SC3311A	TRANSISTOR
Q2404	2SC3311A	TRANSISTOR
Q2406	2SC3311A	TRANSISTOR
Q2407	2SC3311A	TRANSISTOR
Q3001	2SD601A	TRANSISTOR
Q3002	2SD601A	TRANSISTOR
Q3003	2SB709A	TRANSISTOR
Q3004	2SB709A	TRANSISTOR
Q3005	2SB709A	TRANSISTOR
Q3006	2SB709A	TRANSISTOR
Q3015	2SB709A	TRANSISTOR
Q3016	2SD601A	TRANSISTOR
Q3017	2SB709A	TRANSISTOR
Q3018	2SD601A	TRANSISTOR
Q3171	2SA1309A	TRANSISTOR

Ref. No	Part No.	Description
Q3172	2SC3311A	TRANSISTOR
Q3173	2SC3311A	TRANSISTOR
Q3201	2SA1309A	TRANSISTOR
Q3202	2SA1309A	TRANSISTOR
Q4802	2SC3311A	TRANSISTOR (FOR TC-33P10N ONLY)
Q6601	2SD601A	TRANSISTOR
Q6605	2SD601A	TRANSISTOR
Q6607	2SD601A	TRANSISTOR
Q6608	2SD601A	TRANSISTOR
Q6609	2SD601A	TRANSISTOR
Q6610	2SD601A	TRANSISTOR
Q6616	2SB709A	TRANSISTOR
Q6617	2SB709A	TRANSISTOR
Q6618	2SB709A	TRANSISTOR
Q6809	2SD601A	TRANSISTOR
	DIODES	
D002	MA4150H	ZENER DIODE
D003	MA4150H	ZENER DIODE
D025	MA165	DIODE
D101	MA1051L	ZENER DIODE
D301	MA152K	DIODE
D354	MA165	DIODE
D355	MA165	DIODE
D356	MA165	DIODE
D357	MA4150M	ZENER DIODE
D358	MA165	DIODE
D359	MA4150M	ZENER DIODE
D360	ERA22-04	DIODE
D361	ERA22-04	DIODE
D362	ERA22-04	DIODE
D363	MA165	DIODE
D375	MA165	DIODE
D451	ERA15-02	DIODE
D452	MA165	DIODE
D453	MA4039M	ZENER DIODE
D455	MA165	DIODE
D456	MA165	DIODE
D457	MA165	DIODE
D459	MA4039L	ZENER DIODE
D460	MA165	DIODE
D490	ERA22-04	DIODE
D491	ERA22-04	DIODE
D506	MA152K	DIODE
D514	MA178	DIODE
D530	MA3039H	ZENER DIODE
D531	MA704A	DIODE
D534	MA3039H	ZENER DIODE
D535	MA3062H	ZENER DIODE
D551	RH3F	DIODE
D552	TVSRU3AN	DIODE
D553	ERA15-02	DIODE
D554	MA4270M	ZENER DIODE
D570	ERA22-04	DIODE
D580	ERA15-02	DIODE
D581	MA4051M	ZENER DIODE
D591	MA165	DIODE
D595	MA4110M	ZENER DIODE
D607	MA3056L	ZENER DIODE
D751	MA29T-A	DIODE
△ D801	D4SB80Z	DIODE
D802	ERZV07D361	VARISTOR
D814	TMPG10G3	DIODE
D816	ERA22-04	DIODE
D817	ERA22-04	DIODE
D818	ERA22-04	DIODE
D823	MA723	DIODE
D824	ERA15-01	DIODE
D825	EK04	DIODE

Ref. No	Part No.	Description
D826	EK04	DIODE
D827	EK04	DIODE
D828	EK04	DIODE
D829	ERA15-01	DIODE
D830	ERA15-01	DIODE
D831	MA4051M	ZENER DIODE
D832	MA4160H	ZENER DIODE
D833	MA165	DIODE
D834	MA165	DIODE
D835	MA165	DIODE
D836	MA165	DIODE
D840	MA4027H	ZENER DIODE
D842	AU02Z	DIODE
D843	MA6D90	DIODE
D845	MA165	DIODE
D849	MA165	DIODE
D850	RU30A	DIODE
D852	MA4160H	ZENER DIODE
D853	MA4220M	ZENER DIODE
D857	MA165	DIODE
D858	ERA22-04	DIODE
D859	MA4110H	ZENER DIODE
D860	AK04	DIODE
D861	AK04	DIODE
D862	MA4180M	ZENER DIODE
D863	TMPG12G3	DIODE
D864	MA4180M	ZENER DIODE
D865	TMPG10G3	DIODE
D866	TMPG12G3	DIODE
D867	MA165	DIODE
D872	MA165	DIODE
D881	AK04	DIODE
D882	AK04	DIODE
△ D897	TAP116M1R5	THERMISTOR
D901	MA165	DIODE
D1052	LNG101WHAAS	LED
D1102	MA4056L	ZENER DIODE
D1107	MA165	DIODE
D1108	MA165	DIODE
D1110	MA165	DIODE
D1111	MA4047M	ZENER DIODE
D1122	MA4056H	ZENER DIODE
D1123	MA4056H	ZENER DIODE
D1125	MA4062M	ZENER DIODE
D1126	MA4062M	ZENER DIODE
D1127	MA165	DIODE
D1128	MA4091M	ZENER DIODE
D1130	MA165	DIODE
D1132	MA165	DIODE
D1250	MA165	DIODE
D1252	MA165	DIODE
D1253	MA165	DIODE
D1551	ERA22-06	DIODE
D1552	MA165	DIODE
D1553	RP1H	DIODE
D1554	MA165	DIODE
D1555	MA165	DIODE
D1557	MA165	DIODE
D1558	MA165	DIODE
D2301	MA4300H	ZENER DIODE
D2302	MA4300H	ZENER DIODE
D2303	MA4300H	ZENER DIODE
D2304	MA4300H	ZENER DIODE
D2401	MA165	DIODE
D2402	MA165	DIODE
D2403	MA165	DIODE
D2404	MA165	DIODE
D2801	ERB32-02E	DIODE
D3002	MA3140M	ZENER DIODE
D3003	MA3140M	ZENER DIODE

Ref. No	Part No.	Description
D3005	MA3140M	ZENER DIODE
D3007	MA3140M	ZENER DIODE
D3008	MA3140M	ZENER DIODE
D3027	MA3140M	ZENER DIODE
D3028	MA3140M	ZENER DIODE
D3211	MA4140M	ZENER DIODE
D3213	MA4140M	ZENER DIODE
D3215	MA4140M	ZENER DIODE
D3216	MA165	DIODE
D3217	MA165	DIODE
D4801	MA4056M	ZENER DIODE (FOR TC-33P10N ONLY)
D4803	MA4150M	ZENER DIODE
D4804	MA4150M	ZENER DIODE
	COILS	
L001	ELESE330JA	PEAKING COIL
L002	ELESE330JA	PEAKING COIL
L005	ELESE330JA	PEAKING COIL
L103	ELESE150JA	PEAKING COIL
L104	TLQR56N205C	PEAKING COIL 0.56
L105	EIV7EN068B	COIL
L110	ELESE5R6KA	PEAKING COIL
L117	ELESE1R0KA	PEAKING COIL
L119	ELESE1R0KA	PEAKING COIL
L135	TLTACC121J	PEAKING COIL
L152	EIV7EN041B	COIL
L201	EIS7ES004B	COIL
L202	TLQ022K205C	PEAKING COIL
L322	ELESE120JA	PEAKING COIL
L551	ELHKL0518	LINEARITY COIL (FOR TC-29P10N)
L551	ELHKLB053B	LINEARITY COIL (FOR TC-33P10N)
L552	ELH5L7113	LINEARITY COIL (FOR TC-29P10N)
L552	ELH5L7116	LINEARITY COIL (FOR TC-33P10N)
L553	EXCELDR35C	BEAD CHOKE
L554	EXCELDR35C	BEAD CHOKE
L555	EXCELSA35	BEAD CHOKE
L556	TALL13N103JB	INDUCTION COIL
L557	ELC18B801E	CHOKE COIL
L558	EXCELDR25C	BEAD CHOKE
L559	TLUADTB682K	PEAKING COIL
L751	ELC18B501E	CHOKE COIL
△ L801	ELF24V025A	LINE FILTER
△ L802	ELF20N027A	LINE FILTER
△ L803	TLPF107	CHOKE COIL
L804	EXCELDR35C	BEAD CHOKE
L810	TALL08N101KA	INDUCTION COIL
L818	EXCELSA35	BEAD CHOKE
L819	EXCELSA35	BEAD CHOKE
L820	EXCELSA39	BEAD CHOKE
L821	EXCELSA39	BEAD CHOKE
L830	TALL08N101KA	INDUCTION COIL
L842	EXCELDR35C	BEAD CHOKE
L843	EXCELDR35C	BEAD CHOKE
L845	EXCELDR35C	BEAD CHOKE
L849	EXCELDR35C	BEAD CHOKE
L850	EXCELSA39	BEAD CHOKE
L851	EXCELSA39	BEAD CHOKE
L852	TALL08N101KA	INDUCTION COIL
L853	TALL08N470KA	INDUCTION COIL
L860	TLUADTB681K	PEAKING COIL
L861	TLUADTB561K	PEAKING COIL
L881	TAL10RP681LB	INDUCTION COIL
L882	TAL10RP471LB	INDUCTION COIL
L883	TALL08N101KA	INDUCTION COIL
L884	TALL08N330KA	INDUCTION COIL
L951	EXCELSA24	BEAD CHOKE
L953	EXCELSA24	BEAD CHOKE
L954	EXCELSA24	BEAD CHOKE
L955	EXCELSA24	BEAD CHOKE

Ref. No	Part No.	Description
L1101	ELESE4R7JA	PEAKING COIL
L1102	EXCELSA35	BEAD CHOKE
L1181	ELESE100KA	PEAKING COIL
L1182	ELESE100KA	PEAKING COIL
L1551	TALL13N682JB	INDUCTION COIL
L1552	TLTACC330J	PEAKING COIL
L2303	ELESE330JA	PEAKING COIL
L2801	EXCELDR35C	BEAD CHOKE
L2804	EXCELDR35C	BEAD CHOKE
L3001	ELESE330JA	PEAKING COIL
L4801	EXCELSA35	BEAD CHOKE
L4802	EXCELDR35C	BEAD CHOKE (FOR TC-33P10N ONLY)
L4803	ELESE100JA	PEAKING COIL (FOR TC-33P10N ONLY)
L4804	ELEIE102JA	CHOKE COIL (FOR TC-33P10N ONLY)
L6603	ELESE330JA	PEAKING COIL
L6606	ELESE1R0JA	PEAKING COIL
L6609	ELESE150JA	PEAKING COIL
L6610	ELESE100JA	PEAKING COIL
L6612	ELESE100JA	PEAKING COIL
L6614	EXCELDR25C	BEAD CHOKE
L6615	ELB4B574	LC FILTER
LC4801	MIU-212	CORRECTION COIL (FOR TC-33P10N ONLY)
LC6603	TAXA0024	LC FILTER
LC6616	TAX10075	EMI FILTER
LC6617	TAX10075	EMI FILTER
	TRANSFORMERS	
△ T001	ETP28Z441AY	POWER TRANS
△ T551	ZTFL77005A1	FLYBACK TRANS (FOR TC-29P10N)
△ T551	ZTFL77004A1	FLYBACK TRANS (FOR TC-33P10N)
T561	ETH19Y70AY	H DRIVE TRANS
△ T802	ETS37FB1B1AC	SWITCHING TRANS
T1551	ETF18L32B	OUT PUT TRANS
	RESISTORS	
R001	ERDS2TJ472	C 4.7KOHM J 1/4W
R102	ERJ6GEYJ182	M 1.8KOHM J 1/10W
R104	ERJ6GEYJ272	M 2.7KOHM J 1/10W
R105	ERJ6GEYJ470	M 47 OHM J 1/10W
R112	ERJ6GEYJ102	M 1KOHM J 1/10W
R113	ERJ6GEYJ221	M 220 OHM J 1/10W
R114	ERJ6GEYJ471	M 470 OHM J 1/10W
R115	EVND2AA03B13	CONTROL 1KOHMB
R117	ERJ6GEYJ101	M 100 OHM J 1/10W
R118	ERJ6GEYJ271	M 270 OHM J 1/10W
R119	ERJ6GEYJ122	M 1.2KOHM J 1/10W
R123	ERJ6GEYJ102	M 1KOHM J 1/10W
R124	ERG1FJS390D	M 39 OHM J 1W
R126	ERJ6GEYJ183	M 18KOHM J 1/10W
R127	ERJ6GEYJ391	M 390 OHM J 1/10W
R128	ERJ6GEYJ683	M 68KOHM J 1/10W
R134	ERJ6GEYJ100	M 10 OHM J 1/10W
R135	ERJ6GEYJ471	M 470 OHM J 1/10W
R141	ERJ6GEY0R00	M 0 OHM J 1/10W
R151	ERJ6GEYJ473	M 47KOHM J 1/10W
R152	ERJ6GEYJ473	M 47KOHM J 1/10W
R201	ERJ6GEYJ182	M 1.8KOHM J 1/10W
R202	ERJ6GEYJ471	M 470 OHM J 1/10W
R301	ERJ6GEYJ822	M 8.2KOHM J 1/10W
R302	ERJ6GEYJ562	M 5.6KOHM J 1/10W
R303	ERJ6GEYJ103	M 10KOHM J 1/10W
R304	ERJ6ENF1202	M 12KOHM 1/10W
R305	ERJ6GEYJ393	M 39KOHM J 1/10W

Ref. No	Part No.	Description			
R306	ERJ6GEYJ224	M	220KOHM	J	1/10W
R307	ERJ6ENF7872	M	78.7KOHM		1/10W
R308	ERJ6GEYJ221	M	220 OHM	J	1/10W
R309	ERJ6GEYJ274	M	270KOHM	J	1/10W
R310	ERJ6GEYJ102	M	1KOHM	J	1/10W
R311	ERDS2TJ103	C	10KOHM	J	1/4W
R312	ERJ6GEYJ105	M	1MOHM	J	1/10W
R313	ERJ6GEYJ153	M	15KOHM	J	1/10W
R314	ERJ6ENF1370	M	137 OHM		1/10W
R318	ERDS2TJ471	C	470 OHM	J	1/4W
R319	ERDS2TJ471	C	470 OHM	J	1/4W
R322	ERDS2TJ101	C	100 OHM	J	1/4W
R325	ERJ6ENF4221	M	4.22KOHM		1/10W
R326	ERJ6ENF2741	M	2.74KOHM		1/10W
R327	ERJ6GEY0R00	M	0 OHM	J	1/10W
R331	ERJ6GEYJ102	M	1KOHM	J	1/10W
R332	ERJ6GEYJ222	M	2.2KOHM	J	1/10W
R333	ERJ6GEYJ471	M	470 OHM	J	1/10W
R345	ERJ6GEYJ102	M	1KOHM	J	1/10W
R346	ERJ6GEYJ471	M	470 OHM	J	1/10W
R348	ERJ6ENF1500	M	150 OHM		1/10W
R350	ERJ6ENF3000	M	300 OHM		1/10W
R351	ER0S2CKF1201	M	1.2KOHM	F	1/4W
R352	ER0S2CKF1101	M	1100 OHM	F	1/4W
R353	ER0S2CKF9100	M	910 OHM	F	1/4W
R354	ERDS2TJ821	C	820 OHM	J	1/4W
R355	ERDS2TJ821	C	820 OHM	J	1/4W
R356	ERDS2TJ821	C	820 OHM	J	1/4W
R357	ERDS2TJ102	C	1KOHM	J	1/4W
R358	ERG1SJ104P	M	100KOHM	J	1W
R359	ERG1SJ104P	M	100KOHM	J	1W
R360	ERG1SJ104P	M	100KOHM	J	1W
R361	ER0S2CKF7681	M	7.68KOHM	F	1/4W
R362	ER0S2CKF1501	M	1.5KOHM	F	1/4W
R363	ERC12GK102	S	1KOHM	K	1/2W
R364	ERC12GK102	S	1KOHM	K	1/2W
R365	ERC12GK102	S	1KOHM	K	1/2W
R367	ERDS1TJ104	C	100KOHM	J	1/2W
R368	ER0S2CKF1202	M	12KOHM	F	1/4W
R369	ERDS2TJ103	C	10KOHM	J	1/4W
R371	ERDS2TJ102	C	1KOHM	J	1/4W
R372	ERDS2TJ102	C	1KOHM	J	1/4W
△ R374	ERQ12AJ121P	F	120 OHM	J	1/2W
R383	ERDS2TJ222	C	2.2KOHM	J	1/4W
R384	ERDS2TJ104	C	100KOHM	J	1/4W
R385	ERDS2TJ102	C	1KOHM	J	1/4W
R401	ERJ6GEYJ182	M	1.8KOHM	J	1/10W
R405	ERJ6GEYJ102	M	1KOHM	J	1/10W
R406	ERJ6GEYJ683	M	68KOHM	J	1/10W
R410	ER0S2CKF1801	M	1.8KOHM	F	1/4W
R411	ER0S2CKF3901	M	3.9KOHM	F	1/4W
R412	ER0S2CKF6800	M	680 OHM	F	1/4W
R414	ERDS2TJ470	C	47 OHM	J	1/4W
R415	ER0S2CKF1502	M	15KOHM	F	1/4W
R416	ER0S2CKF1822	M	18.2KOHM	F	1/4W
R417	ERDS2TJ103	C	10KOHM	J	1/4W
R451	ERG2FJS331D	M	330 OHM	J	2W
R452	ERDS1FJ6R8	C	6.8 OHM	J	1/2W
R453	ER0S2CKF1202	M	12KOHM	F	1/4W
R454	ERDS2TJ182	C	1.8KOHM	J	1/4W
R455	ERDS2TJ102	C	1KOHM	J	1/4W
R457	ERDS2TJ331	C	330 OHM	J	1/4W
R458	ERX1SJ3R9	M	3.9 OHM	J	1/4W
		(FOR TC-29P10N)			
R458	ERX1SJ3R3P	M	3.3 OHM	J	1W
		(FOR TC-33P10N)			
R459	ERX1SJ3R9	M	3.9 OHM	J	1/4W
		(FOR TC-29P10N)			
R459	ERX1SJ3R3P	M	3.3 OHM	J	1W
		(FOR TC-33P10N)			
R460	ER0S2CKF4871	M	4.87KOHM	F	1/4W

Ref. No	Part No.	Description			
R461	ER0S2CKF1691	M	1.69KOHM	F	1/4W
R462	ERDS2TJ123	C	12KOHM	J	1/4W
R463	ER0S2CKF1202	M	12KOHM	F	1/4W
R464	EVMEGSA00B22	CONTROL	200 OHMB		
R465	ERDS2TJ103	C	10KOHM	J	1/4W
R468	ERDS2TJ104	C	100KOHM	J	1/4W
R469	ERDS2TJ101	C	100 OHM	J	1/4W
R470	ERDS2TJ562	C	5.6KOHM	J	1/4W
R471	ERDS2TJ224	C	220KOHM	J	1/4W
R472	ERDS1FJ1R5	C	1.5 OHM	J	1/2W
R473	ERDS1FJ1R0	C	1 OHM	J	1/2W
R474	ERDS2TJ103	C	10KOHM	J	1/4W
R475	ERDS1FJ1R0	C	1 OHM	J	1/2W
R480	ERDS2TJ392	C	3.9KOHM	J	1/4W
R481	ERDS1FJ1R5	C	1.5 OHM	J	1/2W
R482	ERDS2TJ822	C	8.2KOHM	J	1/4W
R483	ERDS2TJ103	C	10KOHM	J	1/4W
R484	ERDS2TJ473	C	47KOHM	J	1/4W
R485	ERDS2TJ561	C	560 OHM	J	1/4W
R486	ERDS2TJ102	C	1KOHM	J	1/4W
R501	ERJ6GEYJ222	M	2.2KOHM	J	1/10W
R502	ERJ6GEYJ102	M	1KOHM	J	1/10W
R503	ERJ6GEYJ102	M	1KOHM	J	1/10W
R504	ERJ6GEYJ821	M	820 OHM	J	1/10W
R506	ERJ6GEYJ122	M	1.2KOHM	J	1/10W
R508	ERJ6GEYJ101	M	100 OHM	J	1/10W
R509	ERJ6GEYJ274	M	270KOHM	J	1/10W
R511	ERJ6GEYJ102	M	1KOHM	J	1/10W
R512	ERJ6GEYJ681	M	680 OHM	J	1/10W
R513	ERJ6GEYJ222	M	2.2KOHM	J	1/10W
R514	ERJ6GEYJ102	M	1KOHM	J	1/10W
R515	ERJ6GEYJ331	M	330 OHM	J	1/10W
R516	ERJ6GEYJ222	M	2.2KOHM	J	1/10W
R517	ERJ6GEYJ471	M	470 OHM	J	1/10W
R518	ERJ6GEYJ472	M	4.7KOHM	J	1/10W
R520	ERJ6GEYJ562	M	5.6KOHM	J	1/10W
R523	ERJ6GEYJ681	M	680 OHM	J	1/10W
R524	ERG1FJS122D	M	1.2KOHM	J	1W
R525	ERJ6GEYJ472	M	4.7KOHM	J	1/10W
R526	ERJ6GEYJ332	M	3.3KOHM	J	1/10W
R527	ERJ6GEYJ471	M	470 OHM	J	1/10W
R528	ERJ6GEYJ471	M	470 OHM	J	1/10W
R529	ERJ6GEYJ103	M	10KOHM	J	1/10W
R552	ERF5ZK1R8	W	1.8 OHM		5W
R553	ERDS1FJ1R0	C	1 OHM	J	1/2W
△ R554	ERQ2CJ1R2	F	2.2 OHM		2W
		(FOR TC-29P10N)			
△ R554	ERQ2CJ1R5	F	1.5 OHM		2W
		(FOR TC-33P10N)			
R560	ER0S2CKF2002	M	20KOHM	F	1/4W
R561	ER0S2CKF2002	M	20KOHM	F	1/4W
R569	ERDS2TJ331	C	330 OHM	J	1/4W
R570	ERG3FJS152D	M	1.5KOHM	J	3W
R571	ERG3FJS152D	M	1.5KOHM	J	3W
R572	ERG3SJ332H	M	3.3KOHM	J	3W
R573	ERDS2TJ331	C	330 OHM	J	1/4W
R574	ERDS2TJ561	C	560 OHM	J	1/4W
R575	ERDS1FJ1R5	C	1.5 OHM	J	1/2W
△ R576	ERQ12AJ101	F	100 OHM	J	1/2W
△ R579	ERQ12HJ331	F	330 OHM	J	1/2W
△ R580	ERQ14AJ4R7P	F	4.7 OHM	J	1/4W
R581	ER0S2CKF2321	M	2.32KOHM	F	1/4W
R582	ER0S2CKF1782	M	17.4KOHM	F	1/4W
		(FOR TC-29P10N)			
R582	ER0S2CKF1742	M	17.4KOHM	F	1/4W
		(FOR TC-33P10N)			
R583	ERDS2TJ474	C	470KOHM	J	1/4W
R587	ERDS1TJ824	C	820KOHM	J	1/2W
R588	ERDS1TJ824	C	820KOHM	J	1/2W
R589	ERDS2TJ104	C	100KOHM	J	1/4W
R590	ER0S2CKF2702	M	27KOHM	F	1/4W

Ref. No	Part No.	Description
R591	ER0S2CKF3902	M 39KOHM F 1/4W (FOR TC-29P10N)
R591	ER0S2CKF3302	M 33KOHM F 1/4W (FOR TC-33P10N)
R602	ERJ6GEYJ101	M 100 OHM J 1/10W
R606	ERJ6GEY0R00	M 0 OHM J 1/10W
R607	ERJ6GEYJ221	M 220 OHM J 1/10W
R608	ERJ6GEYJ222	M 2.2KOHM J 1/10W
R609	ERJ6GEYJ221	M 220 OHM J 1/10W
R610	ERJ6GEYJ222	M 2.2KOHM J 1/10W
R611	ERJ6GEYJ221	M 220 OHM J 1/10W
R612	ERJ6GEYJ222	M 2.2KOHM J 1/10W
R615	ERJ6GEYJ472	M 4.7KOHM J 1/10W
R616	ERJ6GEYJ152	M 1.5KOHM J 1/10W
R620	ERJ6GEYJ105	M 1MOHM J 1/10W
R621	ERJ6GEYJ102	M 1KOHM J 1/10W
R622	ERJ6GEYJ362	M 3.6KOHM J 1/10W
R623	ERJ6GEYJ152	M 1.5KOHM J 1/10W
R625	ERJ6GEYJ102	M 1KOHM J 1/10W
R626	ERJ6GEYJ123	M 12KOHM J 1/10W
R627	ERJ6GEYJ103	M 10KOHM J 1/10W
R628	ERJ6GEYJ472	M 4.7KOHM J 1/10W
R631	ERJ6GEYJ151	M 150 OHM J 1/10W
R633	ERJ6GEYJ151	M 150 OHM J 1/10W
R634	ERJ6GEYJ102	M 1KOHM J 1/10W
R635	ERJ6GEYJ151	M 150 OHM J 1/10W
R637	ERJ6GEYJ151	M 150 OHM J 1/10W
R647	ERJ6GEYJ151	M 150 OHM J 1/10W
R650	ERJ6GEYJ151	M 150 OHM J 1/10W
R651	ERJ6GEYJ151	M 150 OHM J 1/10W
R652	ERJ6GEYJ151	M 150 OHM J 1/10W
R653	ERJ6GEYJ151	M 150 OHM J 1/10W
R654	ERJ6GEYJ103	M 10KOHM J 1/10W
R656	ERJ6GEYJ151	M 150 OHM J 1/10W
R657	ERJ6GEYJ221	M 220 OHM J 1/10W
R659	ERJ6GEYJ822	M 8.2KOHM J 1/10W
R661	ERJ6GEYJ822	M 8.2KOHM J 1/10W
R674	ERJ6GEYJ471	M 470 OHM J 1/10W
R711	ERDS2TJ823	C 82KOHM J 1/4W (FOR TC-29P10N)
R711	ERDS2TJ333	C 33KOHM J 1/4W (FOR TC-33P10N)
R712	TAV1027B503	VARIABLE RESISTOR
R713	ERDS2TJ103	C 10KOHM J 1/4W
R714	ERDS2TJ154	C 150KOHM J 1/4W
R715	ERDS2TJ393	C 39KOHM J 1/4W
R716	ER0S2CKF1001	M 1KOHM F 1/4W
R717	ER0S2CKF2151	M 2.15KOHM F 1/4W
R719	ERDS2TJ101	C 100 OHM J 1/4W
R751	ERX2FJS6R8D	M 6.8 OHM J 2W
R753	ERDS1TJ821	C 820 OHM J 1/2W
R754	ERDS2TJ221	C 220 OHM J 1/4W
R756	ERDS2TJ821	C 820 OHM J 1/4W
R760	ERDS2TJ102	C 1KOHM J 1/4W
R762	ERDS2TJ222	C 2.2KOHM J 1/4W
△ R802	ERQ14AJ391P	F 390 OHM J 1/4W
R803	ERC14GK824	S 820KOHM 1/4W
R805	ERDS2TJ222	C 2.2KOHM J 1/4W
R806	ERDS2TJ222	C 2.2KOHM J 1/4W
R811	ERG2FJS473D	M 47KOHM J 2W
R812	ERX12SJR22P	M 0.22 OHM J 1/2W
R813	ERDS2TJ152	C 1.5KOHM J 1/4W
R814	ERDS2TJ221	C 220 OHM J 1/4W
R815	ERDS1FJ681	C 680 OHM J 1/2W
R816	ERX12SJR22P	M 0.22 OHM J 1/2W
R817	ERX12SJR22P	M 0.22 OHM J 1/2W
R818	ERDS2TJ332	C 3.3KOHM J 1/4W
R819	ERX12SJR47	M 0.47 OHM 1/2W
R820	ERDS1FJ1R0	C 1 OHM J 1/2W
R821	ERDS1FJ1R0	C 1 OHM J 1/2W

Ref. No	Part No.	Description
R822	ERDS1FJ102	C 1KOHM J 1/2W
R823	ERDS2TJ392	C 3.9KOHM J 1/4W
△ R828	ERC12ZGK825	S 8.2MOHM K 1/2W
R830	ERG1FJS180D	M 18 OHM J 1W
R831	ERDS2TJ473	C 47KOHM J 1/4W
R833	ERDS2TJ103	C 10KOHM J 1/4W
R834	ERDS2TJ472	C 4.7KOHM J 1/4W
R835	ERDS2TJ101	C 100 OHM J 1/4W
R836	ERDS2TJ473	C 47KOHM J 1/4W
R837	ERDS2TJ472	C 4.7KOHM J 1/4W
R838	ERDS2TJ473	C 47KOHM J 1/4W
R839	ERDS2TJ104	C 100KOHM J 1/4W
R842	ERDS2TJ123	C 12KOHM J 1/4W
R843	ERDS2TJ272	C 2.7KOHM J 1/4W
R844	ERDS2TJ222	C 2.2KOHM J 1/4W
R845	ERDS2TJ470	C 47 OHM J 1/4W
R846	ERDS2TJ472	C 4.7KOHM J 1/4W
R847	ERG1FJS122D	M 1.2KOHM J 1W
R848	ERDS2TJ681	C 680 OHM J 1/4W
R849	ERDS2TJ223	C 22KOHM J 1/4W
R850	ERDS2TJ104	C 100KOHM J 1/4W
R851	ERDS2TJ103	C 10KOHM J 1/4W
R854	ERDS2TJ333	C 33KOHM J 1/4W
R856	ERDS2TJ913	C 91KOHM J 1/4W
R857	ERDS2TJ223	C 22KOHM J 1/4W
R858	ERDS2TJ272	C 2.7KOHM J 1/4W
R859	ERDS2TJ123	C 12KOHM J 1/4W
R860	ERG2FJS391D	M 390 OHM J 2W
R872	ERG1FJS331D	M 330 OHM J 1W
R875	ERX12SJ1R2	M 1.2 OHM J 1/2W
R876	ERX12SJ1R2	M 1.2 OHM J 1/2W
R878	ERDS2TJ272	C 2.7KOHM J 1/4W
R882	ER0S2CKF61R9	M 61.9 OHM F 1/4W
R883	ER0S2CKF1911	M 1.91KOHM F 1/4W
R892	ER0S2CKF23R2	M 23.2 OHM F 1/4W
R893	ER0S2CKF2211	M 2.21KOHM F 1/4W
R894	ER0S2CKF30R1	M 30.1 OHM F 1/4W
R895	ER0S2CKF1241	M 1.2KOHM F 1/4W
R896	ERDS2TJ103	C 10KOHM J 1/4W
R897	ERDS2TJ473	C 47KOHM J 1/4W
R898	ERDS2TJ223	C 22KOHM J 1/4W
R901	ERDS2TJ272	C 2.7KOHM J 1/4W
R902	ERDS2TJ103	C 10KOHM J 1/4W
R907	ERJ6GEYJ102	M 1KOHM J 1/10W
R908	ERJ6GEYJ331	M 330 OHM J 1/10W
R916	ERJ6ENF5600	M 560 OHM 1/10W
R920	ER0S2CKF2700	M 270 OHM F 1/4W
R921	ER0S2CKF9090	M 909 OHM F 1/4W (FOR TC-29P10N)
R921	ER0S2CKF1001	M 1KOHM F 1/4W (FOR TC-33P10N)
R922	ERDS2TJ104	C 100KOHM J 1/4W
R923	ERDS2TJ561	C 560 OHM J 1/4W
R924	ERDS2TJ104	C 100KOHM J 1/4W
R925	ERDS2TJ331	C 330 OHM J 1/4W
R926	ERDS2TJ822	C 8.2KOHM J 1/4W
R927	ERDS2TJ822	C 8.2KOHM J 1/4W
R928	ERDS2TJ101	C 100 OHM J 1/4W
R929	ERDS2TJ101	C 100 OHM J 1/4W
R930	ERDS2TJ561	C 560 OHM J 1/4W
R931	ERDS2TJ104	C 100KOHM J 1/4W
R933	ERDS2TJ331	C 330 OHM J 1/4W
R934	ERDS2TJ561	C 560 OHM J 1/4W
R935	ERDS2TJ183	C 18KOHM J 1/4W
R937	ERDS2TJ103	C 10KOHM J 1/4W
R938	ERDS2TJ331	C 330 OHM J 1/4W
R951	ERDS2TJ821	C 820 OHM J 1/4W
R952	ERDS2TJ223	C 22KOHM J 1/4W
R953	ERDS2TJ332	C 3.3KOHM J 1/4W
R954	ERDS2TJ431	C 430 OHM J1/4W

Ref. No	Part No.	Description				
R956	ERDS2TJ510	C	51 OHM	J	1/4W	
R958	ERDS2TJ391	C	390 OHM	J	1/4W	
R959	ERDS2TJ101	C	100 OHM	J	1/4W	
△ R960	ERQ14AJ100P	F	10 OHM	J	1/4W	
△ R961	ERQ1CJP331S	F	330 OHM	J	1W	
R962	ERDS2TJ330	C	33 OHM	J	1/4W	
R963	ERDS2TJ330	C	33 OHM	J	1/4W	
R964	ERDS2TJ471	C	470 OHM	J	1/4W	
R965	ERDS2TJ563	C	56KOHM	J	1/4W	
R966	ERDS1FJ471	C	470 OHM	J	1/2W	
R967	ERDS2TJ563	C	56KOHM	J	1/4W	
R968	ERDS2TJ471	C	470 OHM	J	1/4W	
R969	ERDS2TJ390	C	39 OHM	J	1/4W	
R970	ERDS2TJ2R7	C	2.7 OHM	J	1/4W	
R971	ERDS2TJ2R7	C	2.7 OHM	J	1/4W	
R972	ERDS2TJ390	C	39 OHM	J	1/4W	
R973	ERDS2TJ101	C	100 OHM	J	1/4W	
R974	ERDS2TJ333	C	33KOHM	J	1/4W	
R975	ERDS2TJ101	C	100 OHM	J	1/4W	
R976	ERDS2TJ101	C	100 OHM	J	1/4W	
R977	ERDS2TJ561	C	560 OHM	J	1/4W	
R978	ERDS2TJ101	C	100 OHM	J	1/4W	
R987	ERDS2TJ472	C	4.7KOHM	J	1/4W	
R988	ERDS2TJ331	C	330 OHM	J	1/4W	
R989	ERDS2TJ682	C	6.8KOHM	J	1/4W	
R990	ERDS2TJ471	C	470 OHM	J	1/4W	
R993	ERDS2TJ471	C	470 OHM	J	1/4W	
R1050	ERDS2TJ470	C	47 OHM	J	1/4W	
R1051	ERDS2TC0	C	0 OHM		1/4W	
R1052	ERDS2TJ102	C	1KOHM	J	1/4W	
R1056	ER0S2CKF2102	M	21KOHM	F	1/4W	
R1057	ER0S2CKF1002	M	10KOHM	F	1/4W	
R1058	ERDS2TJ222	C	2.2KOHM	J	1/4W	
R1059	ERDS2TJ222	C	2.2KOHM	J	1/4W	
R1060	ERDS2TJ332	C	3.3KOHM	J	1/4W	
R1061	ERDS2TJ512	C	5.1KOHM	J	1/4W	
R1062	ERDS2TJ912	C	9.1KOHM	J	1/4W	
R1068	ERDS2TJ473	C	47KOHM	J	1/4W	
R1069	ERDS2TJ103	C	10KOHM	J	1/4W	
R1070	ERDS2TJ101	C	100 OHM	J	1/4W	
R1104	ERDS2TJ393	C	39KOHM	J	1/4W	
R1106	ER0S2CKF33R0	M	33 OHM	F	1/4W	
R1107	ERDS2TJ151	C	150 OHM	J	1/4W	
R1108	ERDS2TJ103	C	10KOHM	J	1/4W	
R1110	ERDS2TJ103	C	10KOHM	J	1/4W	
R1111	ERDS2TJ103	C	10KOHM	J	1/4W	
R1115	ERDS2TJ473	C	47KOHM	J	1/4W	
R1116	ERDS2TJ103	C	10KOHM	J	1/4W	
R1117	ERDS2TJ332	C	3.3KOHM	J	1/4W	
R1118	ERDS2TJ103	C	10KOHM	J	1/4W	
R1120	ERDS2TJ221	C	220 OHM	J	1/4W	
R1122	ERDS2TJ103	C	10KOHM	J	1/4W	
R1123	ERDS2TJ101	C	100 OHM	J	1/4W	
R1124	ERDS2TJ101	C	100 OHM	J	1/4W	
R1125	ERDS2TJ101	C	100 OHM	J	1/4W	
R1126	ERDS1FJ122	C	1.2KOHM	J	1/2W	
R1127	ERDS2TJ101	C	100 OHM	J	1/4W	
R1128	ERDS2TJ471	C	470 OHM	J	1/4W	
R1131	ERDS2TJ224	C	220KOHM	J	1/4W	
R1133	ERDS2TJ102	C	1KOHM	J	1/4W	
R1134	ERDS2TJ223	C	22KOHM	J	1/4W	
R1136	ERDS2TJ103	C	10KOHM	J	1/4W	
R1137	ERDS2TJ102	C	1KOHM	J	1/4W	
R1138	ERDS2TJ102	C	1KOHM	J	1/4W	
R1139	ERDS2TJ102	C	1KOHM	J	1/4W	
R1143	ERDS2TJ102	C	1KOHM	J	1/4W	
R1145	ERDS2TJ102	C	1KOHM	J	1/4W	
R1148	ERDS2TJ102	C	1KOHM	J	1/4W	
R1149	ERDS2TJ103	C	10KOHM	J	1/4W	
R1150	ERDS2TJ102	C	1KOHM	J	1/4W	

Ref. No	Part No.	Description				
R1151	ERDS2TJ471	C	470 OHM	J	1/4W	
R1152	ERDS2TJ471	C	470 OHM	J	1/4W	
R1154	ERDS2TJ123	C	12KOHM	J	1/4W	
		(FOR TC-33P10N ONLY)				
R1157	ERDS2TJ103	C	10KOHM	J	1/4W	
R1159	ERDS2TJ182	C	1.8KOHM	J	1/4W	
R1160	ERDS2TJ102	C	1KOHM	J	1/4W	
R1161	ERDS2TJ182	C	1.8KOHM	J	1/4W	
R1162	ERDS2TJ102	C	1KOHM	J	1/4W	
R1163	ERDS2TJ102	C	1KOHM	J	1/4W	
R1164	ERDS2TJ472	C	4.7KOHM	J	1/4W	
R1165	ERDS2TJ472	C	4.7KOHM	J	1/4W	
R1166	ERDS2TJ103	C	10KOHM	J	1/4W	
R1167	ERDS2TJ101	C	100 OHM	J	1/4W	
R1168	ERDS2TJ101	C	100 OHM	J	1/4W	
R1169	ERDS2TJ103	C	10KOHM	J	1/4W	
R1170	ERDS2TJ101	C	100 OHM	J	1/4W	
R1172	ERDS2TJ102	C	1KOHM	J	1/4W	
R1173	ERDS2TJ102	C	1KOHM	J	1/4W	
R1175	ERDS2TJ102	C	1KOHM	J	1/4W	
R1176	ERDS2TJ472	C	4.7KOHM	J	1/4W	
R1178	ERDS2TJ102	C	1KOHM	J	1/4W	
R1179	ERDS2TJ102	C	1KOHM	J	1/4W	
R1180	ERDS2TJ102	C	1KOHM	J	1/4W	
		(TC-33P10N ONLY)				
R1183	ERDS2TJ560	C	56 OHM	J	1/4W	
R1184	ERDS2TJ560	C	56 OHM	J	1/4W	
R1186	ERDS2TJ101	C	100 OHM	J	1/4W	
R1188	ERDS2TJ221	C	220 OHM	J	1/4W	
R1189	ERDS2TJ560	C	56 OHM	J	1/4W	
R1190	ERDS2TJ560	C	56 OHM	J	1/4W	
R1191	ER0S2CKF2201	M	2.2KOHM	F	1/4W	
R1192	ERDS2TJ820	C	82 OHM	J	1/4W	
R1193	ERDS2TJ560	C	56 OHM	J	1/4W	
R1194	ERDS2TJ560	C	56 OHM	J	1/4W	
R1196	ERDS2TJ103	C	10KOHM	J	1/4W	
R1201	ERDS2TJ331	C	330 OHM	J	1/4W	
R1202	ERDS2TJ102	C	1KOHM	J	1/4W	
R1203	ERDS2TJ272	C	2.7KOHM	J	1/4W	
R1204	ERDS2TJ472	C	4.7KOHM	J	1/4W	
R1205	ER0S2CKF1502	M	15KOHM	F	1/4W	
R1206	ERDS2TJ102	C	1KOHM	J	1/4W	
R1207	ERDS2TJ104	C	100KOHM	J	1/4W	
R1209	ERDS2TJ151	C	150 OHM	J	1/4W	
R1212	ERDS2TJ223	C	22KOHM	J	1/4W	
R1215	ERDS2TJ681	C	680 OHM	J	1/4W	
R1216	ERDS2TJ184	C	180KOHM	J	1/4W	
R1217	ERDS2TJ103	C	10KOHM	J	1/4W	
R1218	ERDS2TJ104	C	100KOHM	J	1/4W	
R1219	ERDS2TJ473	C	47KOHM	J	1/4W	
R1220	ERDS2TJ103	C	10KOHM	J	1/4W	
R1221	ERDS2TJ223	C	22KOHM	J	1/4W	
R1222	ERDS2TJ103	C	10KOHM	J	1/4W	
R1223	ERDS2TJ103	C	10KOHM	J	1/4W	
R1224	ERDS2TJ103	C	10KOHM	J	1/4W	
R1225	ERDS2TJ103	C	10KOHM	J	1/4W	
R1227	ERDS2TJ681	C	680 OHM	J	1/4W	
R1233	ERDS2TJ123	C	12KOHM	J	1/4W	
R1236	ERDS2TJ103	C	10KOHM	J	1/4W	
R1238	ERDS2TJ103	C	10KOHM	J	1/4W	
R1239	ERDS2TJ103	C	10KOHM	J	1/4W	
R1242	ERDS2TJ332	C	3.3KOHM	J	1/4W	
R1243	ERDS2TJ153	C	15KOHM	J	1/4W	
R1244	ERDS2TJ102	C	1KOHM	J	1/4W	
R1245	ERDS2TJ101	C	100 OHM	J	1/4W	
R1252	ERDS2TJ563	C	56KOHM	J	1/4W	
R1253	ERDS2TJ123	C	12KOHM	J	1/4W	
R1254	ERDS2TJ101	C	100 OHM	J	1/4W	
R1258	ERJ6GEYJ220	M	22 OHM	J	1/10W	
R1259	ERJ6GEYJ220	M	22 OHM	J	1/10W	
R1261	ERDS2TJ682	C	6.8KOHM	J	1/4W	

Ref. No	Part No.	Description				
R1262	ERDS2TJ102	C	1KOHM	J	1/4W
R1263	ERDS2TJ682	C	6.8KOHM	J	1/4W
R1264	ERDS2TJ102	C	1KOHM	J	1/4W
R1267	ERDS2TJ682	C	6.8KOHM	J	1/4W
R1268	ERDS2TJ102	C	1KOHM	J	1/4W
R1294	ERDS2TJ103	C	10KOHM	J	1/4W
		(FOR TC-33P10N)			
R1295	ERDS2TJ103	C	10KOHM	J	1/4W
R1296	ERDS2TJ101	C	100 OHM	J	1/4W
R1297	ERJ6GEYJ103	M	10KOHM	J	1/10W
R1298	ERJ6GEYJ103	M	10KOHM	J	1/10W
R1450	ERDS2TJ103	C	10KOHM	J	1/4W
R1551	ERDS2TJ473	C	47KOHM	J	1/4W
R1552	ERDS2TJ222	C	2.2KOHM	J	1/4W
R1553	ERDS2TJ221	C	220 OHM	J	1/4W
R1554	ERDS2TJ103	C	10KOHM	J	1/4W
R1555	ERDS2TJ822	C	8.2KOHM	J	1/4W
R1556	ER0S2CKF1802	M	18KOHM	F	1/4W
R1557	ERDS2TJ472	C	4.7KOHM	J	1/4W
R1558	ERDS2TJ473	C	47KOHM	J	1/4W
R1559	ERDS2TJ561	C	560 OHM	J	1/4W
R1560	ERDS2TJ472	C	4.7KOHM	J	1/4W
R1561	ERDS2TJ564	C	560KOHM	J	1/4W
R1562	ERDS2TJ472	C	4.7KOHM	J	1/4W
R1563	ER0S2CKF7152	M	71.5KOHM	F	1/4W
		(FOR TC-29P10N)			
R1563	ER0S2CKF7872	M	78.7KOHM	F	1/4W
		(FOR TC-33P10N)			
R1564	ER0S2CKF4641	M	4.64KOHM	F	1/4W
		(FOR TC-29P10N)			
R1564	ER0S2CKF5111	M	5.11KOHM	F	1/4W
		(FOR TC-33P10N)			
R1565	ERDS2TJ104	C	100KOHM	J	1/4W
R1566	ERDS2TJ104	C	100KOHM	J	1/4W
R1567	ERDS2TJ104	C	100KOHM	J	1/4W
R1568	ERDS2TJ104	C	100KOHM	J	1/4W
R1569	ERDS2TJ102	C	1KOHM	J	1/4W
R1570	ERC12GK104	S	100KOHM	K	1/2W
△ R1571	ERQ2CJP821S	F	820 OHM	J	2W
R1572	ERDS2TJ334	C	330KOHM	J	1/4W
R1573	ERDS2TJ473	C	47KOHM	J	1/4W
R1575	ERDS2TJ683	C	68KOHM	J	1/4W
R1576	ERDS2TJ101	C	100 OHM	J	1/4W
R1577	EVMEGSA00B53	CONTROL5KOHMB			
R1578	ERDS2TJ822	C	8.2KOHM	J	1/4W
R1579	ER0S2CKF1302	M	13KOHM	F	1/4W
R1580	ERDS2TJ563	C	56KOHM	J	1/4W
R1581	EVMEGSA00B23	CONTROL2KOHMB			
R1582	ERDS2TJ752	C	7.5KOHM	J	1/4W
R1583	ERDS2TJ223	C	22KOHM	J	1/4W
R1584	ERDS2TJ103	C	10KOHM	J	1/4W
R1585	ERDS2TJ103	C	10KOHM	J	1/4W
R1586	ERDS1TJ681	C	680 OHM	J	1/2W
R1587	ERDS2TJ101	C	100 OHM	J	1/4W
R1588	ERG1FJS472D	M	4.7KOHM	J	1W
△ R1589	ERQ2CJP681S	F	680 OHM	J	2W
R1590	ERDS2TJ473	C	47KOHM	J	1/4W
R1592	ERDS2TJ684	C	680KOHM	J	1/4W
R1593	ERDS2TJ125	C	1.2MOHM	J	1/4W
R1594	ERDS2TJ125	C	1.2MOHM	J	1/4W
R1595	ERDS2TJ103	C	10KOHM	J	1/4W
R1596	ERDS2TJ124	C	120KOHM	J	1/4W
R1597	ERDS2TJ472	C	4.7KOHM	J	1/4W
R2200	EVND2AA03B14	CONTROL10KOHMB			
R2207	ERJ6GEYJ104	M	100KOHM	J	1/10W
R2208	ERJ6GEYJ105	M	1MOHM	J	1/10W
R2209	TAV1034B103	VARIABLE RESISTOR			
R2210	ERJ6ENF4302	M	43KOHM		1/10W
R2211	ERJ6GEYJ332	M	3.3KOHM	J	1/10W
R2212	ERJ6GEYJ392	M	3.9KOHM	J	1/10W
R2213	EVND8AA03B53	CONTROL5KOHMB			

Ref. No	Part No.	Description			
R2215	ERJ6GEYJ392	M	3.9KOHM	J	1/10W
R2216	ERJ6GEYJ103	M	10KOHM	J	1/10W
R2217	ERJ6GEYJ102	M	1KOHM	J	1/10W
R2218	ERJ6GEYJ102	M	1KOHM	J	1/10W
R2219	ERJ6GEYJ473	M	47KOHM	J	1/10W
R2220	EVND8AA03B54	CONTROL50KOHMB			
R2221	EVND8AA03B24	CONTROL20KOHMB			
R2222	ERJ6ENF4422	M	44.2KOHM		1/10W
R2228	ERJ6GEYJ823	M	82KOHM	J	1/10W
R2229	ERJ6GEYJ103	M	10KOHM	J	1/10W
R2231	ERJ6GEYJ153	M	15KOHM	J	1/10W
R2232	ERJ6GEYJ153	M	15KOHM	J	1/10W
R2234	ERJ6GEYJ823	M	82KOHM	J	1/10W
R2235	ERJ6GEYJ562	M	5.6KOHM	J	1/10W
R2236	ERJ6GEYJ154	M	150KOHM	J	1/10W
R2238	ERJ6ENF4702	M	47KOHM		1/10W
R2245	ERJ6GEYJ471	M	470 OHM	J	1/10W
R2246	ERJ6GEYJ392	M	3.9KOHM	J	1/10W
R2248	ERJ6GEYJ104	M	100KOHM	J	1/10W
R2249	ERJ6GEYJ472	M	4.7KOHM	J	1/10W
R2253	ERJ6GEYJ103	M	10KOHM	J	1/10W
R2301	ERDS2TJ561	C	560 OHM	J	1/4W
R2302	ERDS2TJ122	C	1.2KOHM	J	1/4W
R2303	ERDS2TJ122	C	1.2KOHM	J	1/4W
△ R2304	ERQ12HKR22	F	0.22 OHM	K	1/2W
R2305	ERDS2TJ822	C	8.2KOHM	J	1/4W
R2309	ERDS1FJ2R2	C	2.2 OHM	J	1/2W
R2310	ERDS1FJ2R2	C	2.2 OHM	J	1/2W
R2311	ERDS1FJ2R2	C	2.2 OHM	J	1/2W
R2312	ERDS2TJ472	C	4.7KOHM	J	1/4W
R2313	ERDS2TJ472	C	4.7KOHM	J	1/4W
R2314	ERDS2TJ822	C	8.2KOHM	J	1/4W
R2315	ERDS2TJ103	C	10KOHM	J	1/4W
R2316	ERDS2TJ103	C	10KOHM	J	1/4W
R2317	ERDS2TJ103	C	10KOHM	J	1/4W
R2318	ERDS2TJ104	C	100KOHM	J	1/4W
R2321	ERDS1FJ561	C	560 OHM	J	1/2W
R2322	ERDS1FJ561	C	560 OHM	J	1/2W
R2323	ERDS1FJ561	C	560 OHM	J	1/2W
R2324	ERDS2TJ102	C	1KOHM	J	1/4W
R2371	ERDS1TJ121	C	120 OHM	J	1/2W
R2372	ERDS1TJ121	C	120 OHM	J	1/2W
R2375	ERDS1TJ560	C	56 OHM	J	1/2W
R2380	ERDS1TJ560	C	56 OHM	J	1/2W
R2401	ERDS2TJ473	C	47KOHM	J	1/4W
R2402	ERDS2TJ103	C	10KOHM	J	1/4W
R2403	ERDS2TJ473	C	47KOHM	J	1/4W
R2404	ERDS2TJ103	C	10KOHM	J	1/4W
R2405	ERDS2TJ103	C	10KOHM	J	1/4W
R2406	ERDS2TJ101	C	100 OHM	J	1/4W
R2407	ERDS2TJ103	C	10KOHM	J	1/4W
R2408	ERDS2TJ223	C	22KOHM	J	1/4W
R2409	ERDS2TJ472	C	4.7KOHM	J	1/4W
R2410	ERDS2TJ103	C	10KOHM	J	1/4W
R2411	ERDS2TJ103	C	10KOHM	J	1/4W
R2412	ERDS2TJ472	C	4.7KOHM	J	1/4W
R2413	ERDS2TJ104	C	100KOHM	J	1/4W
R2414	ERDS2TJ102	C	1KOHM	J	1/4W
R2415	ERDS2TJ103	C	10KOHM	J	1/4W
R2416	ERDS2TJ103	C	10KOHM	J	1/4W
R2417	ERDS2TJ104	C	100KOHM	J	1/4W
R2418	ERDS2TJ103	C	10KOHM	J	1/4W
R2419	ERDS2TJ473	C	47KOHM	J	1/4W
R2420	ERDS2TJ103	C	10KOHM	J	1/4W
R2421	ERDS2TJ102	C	1KOHM	J	1/4W
R2422	ERDS2TJ104	C	100KOHM	J	1/4W
R2424	ERDS2TJ472	C	4.7KOHM	J	1/4W
R2426	ERDS2TJ472	C	4.7KOHM	J	1/4W
R2427	ERDS2TJ472	C	4.7KOHM	J	1/4W

Ref. No	Part No.	Description				
R2429	ERDS2TJ123	C	12KOHM	J	1/4W
R2430	ER0S2CKF1802	M	18KOHM	F	1/4W
R2433	ERDS2TJ123	C	12KOHM	J	1/4W
R2434	ER0S2CKF1502	M	15KOHM	F	1/4W
R2437	ERDS2TJ563	C	56KOHM	J	1/4W
R2439	ERDS2TJ224	C	220KOHM	J	1/4W
R2440	ERDS2TJ153	C	15KOHM	J	1/4W
R2441	ERDS2TJ181	C	180 OHM	J	1/4W
R2443	ERDS2TJ181	C	180 OHM	J	1/4W
R2444	ERDS2TJ473	C	47KOHM	J	1/4W
R2445	ERDS2TJ472	C	4.7KOHM	J	1/4W
R2446	ERDS2TJ563	C	56KOHM	J	1/4W
R2447	ERDS2TJ103	C	10KOHM	J	1/4W
R2448	ERDS2TJ104	C	100KOHM	J	1/4W
R2449	ERDS2TJ102	C	1KOHM	J	1/4W
R2450	ERDS2TJ102	C	1KOHM	J	1/4W
R2451	ERDS2TJ104	C	100KOHM	J	1/4W
R3003	ERJ6GEYJ184	M	180KOHM	J	1/10W
R3004	ERJ6GEYJ184	M	180KOHM	J	1/10W
R3005	ERJ6GEYJ184	M	180KOHM	J	1/10W
R3006	ERJ6GEYJ184	M	180KOHM	J	1/10W
R3007	ERJ6GEYJ184	M	180KOHM	J	1/10W
R3011	ERJ6GEYJ101	M	100 OHM	J	1/10W
R3012	ERJ6GEYJ184	M	180KOHM	J	1/10W
R3013	ERJ6GEYJ101	M	100 OHM	J	1/10W
R3015	ERJ8ENF75R0	M	75OHM		1/8W
R3016	ERJ8ENF75R0	M	75OHM		1/8W
R3017	ERJ8ENF75R0	M	75OHM		1/8W
R3018	ERJ8ENF75R0	M	75OHM		1/8W
R3021	ERJ8ENF75R0	M	75OHM		1/8W
R3022	ERJ8ENF75R0	M	75OHM		1/8W
R3028	ERJ6GEYJ102	M	1KOHM	J	1/10W
R3029	ERJ6GEYJ680	M	68 OHM	J	1/10W
R3031	ERJ6GEYJ102	M	1KOHM	J	1/10W
R3032	ERJ6GEYJ680	M	68 OHM	J	1/10W
R3033	ERJ6GEYJ680	M	68 OHM	J	1/10W
R3034	ERJ6GEYJ472	M	4.7KOHM	J	1/10W
R3035	ERJ6GEYJ472	M	4.7KOHM	J	1/10W
R3036	ERJ6GEYJ102	M	1KOHM	J	1/10W
R3037	ERJ6GEYJ102	M	1KOHM	J	1/10W
R3038	ERJ6GEYJ105	M	1MOHM	J	1/10W
R3040	ERJ6GEYJ274	M	270KOHM	J	1/10W
R3041	ERJ8GEYJ431	M	430 OHM	J	1/8W
R3042	ERJ8GEYJ431	M	430 OHM	J	1/8W
R3044	ERJ6GEYJ471	M	470 OHM	J	1/10W
R3048	ERJ6GEYJ431	M	430 OHM	J	1/10W
R3050	ERJ6GEYJ471	M	470 OHM	J	1/10W
R3051	ERJ8GEYJ431	M	430 OHM	J	1/8W
R3052	ERJ8GEYJ431	M	430 OHM	J	1/8W
R3053	ERJ6GEYJ472	M	4.7KOHM	J	1/10W
R3054	ERJ6GEYJ471	M	470 OHM	J	1/10W
R3056	ERJ6GEYJ103	M	10KOHM	J	1/10W
R3057	ERJ6GEYJ103	M	10KOHM	J	1/10W
R3058	ERJ6GEYJ103	M	10KOHM	J	1/10W
R3059	ERJ6GEYJ103	M	10KOHM	J	1/10W
R3063	ERJ6GEYJ221	M	220 OHM	J	1/10W
R3064	ERJ6GEYJ221	M	220 OHM	J	1/10W
R3075	ERJ6GEYJ123	M	12KOHM	J	1/10W
R3078	ERJ6GEYJ822	M	8.2KOHM	J	1/10W
R3079	ERJ6GEYJ221	M	220 OHM	J	1/10W
R3080	ERJ6GEYJ102	M	1KOHM	J	1/10W
R3081	ERJ6GEYJ221	M	220 OHM	J	1/10W
R3082	ERJ6GEYJ102	M	1KOHM	J	1/10W
R3083	ERJ6GEYJ221	M	220 OHM	J	1/10W
R3084	ERJ6GEYJ221	M	220 OHM	J	1/10W
R3085	ERJ6GEYJ221	M	220 OHM	J	1/10W
R3088	ERJ6GEYJ560	M	56 OHM	J	1/10W
R3089	ERJ6GEYJ560	M	56 OHM	J	1/10W
R3090	ERJ6GEYJ221	M	220 OHM	J	1/10W
R3091	ERJ6GEYJ102	M	1KOHM	J	1/10W

Ref. No	Part No.	Description				
R3092	ERJ6GEYJ102	M	1KOHM	J	1/10W
R3093	ERJ6GEYJ102	M	1KOHM	J	1/10W
R3094	ERJ6GEYJ102	M	1KOHM	J	1/10W
R3095	ERJ6GEYJ102	M	1KOHM	J	1/10W
R3096	ERJ6GEYJ102	M	1KOHM	J	1/10W
R3097	ERJ6GEYJ221	M	220 OHM	J	1/10W
R3098	ERJ6GEYJ221	M	220 OHM	J	1/10W
R3099	ERJ6GEYJ221	M	220 OHM	J	1/10W
R3100	ERJ6GEYJ221	M	220 OHM	J	1/10W
R3101	ERJ6GEYJ221	M	220 OHM	J	1/10W
R3102	ERJ6GEYJ221	M	220 OHM	J	1/10W
R3109	ERDS2TJ471	C	470 OHM	J	1/4W
R3117	ERJ6GEYJ331	M	330 OHM	J	1/10W
R3119	ERJ6GEYJ331	M	330 OHM	J	1/10W
R3121	ERJ6GEYJ561	M	560 OHM	J	1/10W
R3122	ERJ6GEYJ331	M	330 OHM	J	1/10W
R3123	ERJ6GEYJ331	M	330 OHM	J	1/10W
R3124	ERJ6GEYJ472	M	4.7KOHM	J	1/10W
R3125	ERJ6GEYJ821	M	820 OHM	J	1/10W
R3126	ERJ6GEYJ472	M	4.7KOHM	J	1/10W
R3171	ERDS2TJ101	C	100 OHM	J	1/4W
R3172	ERDS2TJ223	C	22KOHM	J	1/4W
R3173	ERDS2TJ223	C	22KOHM	J	1/4W
R3174	ERDS2TJ471	C	470 OHM	J	1/4W
R3175	ERDS2TJ102	C	1KOHM	J	1/4W
R3179	ER0S2CKF75R0	M	75 OHM	F	1/4W
R3180	ER0S2CKF75R0	M	75 OHM	F	1/4W
R3181	ER0S2CKF75R0	M	75 OHM	F	1/4W
R3182	ERDS2TJ102	C	1KOHM	J	1/4W
R3183	ERDS2TJ101	C	100 OHM	J	1/4W
R3184	ERDS2TJ103	C	10KOHM	J	1/4W
R3186	ERDS2TJ102	C	1KOHM	J	1/4W
R3187	ERDS2TJ153	C	15KOHM	J	1/4W
R3188	ERDS2TJ912	C	9.1KOHM	J	1/4W
R3189	ERDS2TJ471	C	470 OHM	J	1/4W
R3190	ERDS2TJ223	C	22KOHM	J	1/4W
R3191	ERDS2TJ223	C	22KOHM	J	1/4W
R3192	ERDS2TJ471	C	470 OHM	J	1/4W
R3193	ERDS2TJ102	C	1KOHM	J	1/4W
R3194	ERDS2TJ184	C	180KOHM	J	1/4W
R3195	ERDS2TJ184	C	180KOHM	J	1/4W
R3201	ERDS2TJ101	C	100 OHM	J	1/4W
R3202	ER0S2CKF1911	M	1.91KOHM	F	1/4W
R3203	ER0S2CKF4021	M	4.02KOHM	F	1/4W
R3204	ER0S2CKF1002	M	10KOHM	F	1/4W
R3205	ERDS2TJ103	C	10KOHM	J	1/4W
R3206	ER0S2CKF2202	M	22KOHM	F	1/4W
R3207	ERDS2TJ682	C	6.8KOHM	J	1/4W
R3208	ERDS2TJ433	C	43KOHM	J	1/4W
R3209	ERDS2TJ103	C	10KOHM	J	1/4W
R4801	ERDS2TJ472	C	4.7KOHM	J	1/4W
R4803	ERX12SJ2R7	M	2.7 OHM	J	1/2W
R4804	ERDS2TJ272	C	2.7KOHM	J	1/4W
R4805	ER0S2CKF1331	M	1.33KOHM	F	1/4W
R4806	ER0S2CKF3320	M	3.32KOHM	F	1/4W
R4807	ER0S2CKF1001	M	1KOHM	F	1/4W
R4808	ER0S2CKF3832	M	38.3KOHM	F	1/4W
R4809	ER0S2CKF9091	M	9.09KOHM	F	1/4W
R4810	ER0S2CKF2213	M	221KOHM	F	1/4W
R4811	ER0S2CKF5491	M	5.49KOHM	F	1/4W
R4812	ER0S2CKF5621	M	5.62KOHM	F	1/4W
R4813	ERDS1F220	C	22 OHM	J	1/2W (FOR TC-29P10N)
R4813	ERDS1FJ3R9	C	3.9 OHM	J	1/2W (FOR TC-33P10N)
R4818	ERX12SJ2R7	M	2.7 OHM	J	1/2W (FOR TC-33P10N ONLY)
R4819	ERDS2TJ272	C	2.7KOHM	J	1/4W (FOR TC-33P10N ONLY)
R4820	ER0S2CKF1331	M	1.33KOHM	F	1/4W (FOR TC-33P10N ONLY)

Ref. No	Part No.	Description
R4821	ER0S2CKF3320	M 3.32KOHM F 1/4W (FOR TC-33P10N ONLY)
R4822	ER0S2CKF1001	M 1KOHM F 1/4W (FOR TC-33P10N ONLY)
R4823	ERDS2TJ472	C 4.7KOHM J 1/4W (FOR TC-33P10N ONLY)
R4824	ER0S2CKF5621	M 5.62KOHM F 1/4W (FOR TC-33P10N ONLY)
R4825	ER0S2CKF3832	M 38.3KOHM F 1/4W (FOR TC-33P10N ONLY)
R4826	ER0S2CKF2213	M 221KOHM F 1/4W (FOR TC-33P10N ONLY)
R4827	ER0S2CKF9091	M 9.09KOHM F 1/4W (FOR TC-33P10N ONLY)
R4828	ER0S2CKF5491	M 5.49KOHM F 1/4W (FOR TC-33P10N ONLY)
R4829	ERDS2TJ102	C 1KOHM J 1/4W (FOR TC-33P10N ONLY)
R4837	ERDS2TJ102	C 1KOHM J 1/4W (FOR TC-33P10N ONLY)
R4840	ERDS2TJ103	C 10KOHM J 1/4W (FOR TC-33P10N ONLY)
R4841	ERDS2TJ103	C 10KOHM J 1/4W (FOR TC-33P10N ONLY)
R4842	ERDS2TJ101	C 100 OHM J 1/4W (FOR TC-33P10N ONLY)
R4843	ERDS2TJ471	C 470 OHM J 1/4W (FOR TC-33P10N ONLY)
R4844	ERDS2TJ561	C 560 OHM J 1/4W (FOR TC-33P10N ONLY)
R4850	ERDS2TJ104	C 100KOHM J 1/4W (FOR TC-33P10N ONLY)
R4851	ERDS2TJ104	C 100KOHM J 1/4W (FOR TC-33P10N ONLY)
R4852	ERDS2TJ104	C 100KOHM J 1/4W (FOR TC-33P10N ONLY)
R4853	ERDS2TJ104	C 100KOHM J 1/4W (FOR TC-33P10N ONLY)
R4854	ERDS2TJ101	C 100 OHM J 1/4W (FOR TC-33P10N ONLY)
R4855	ERDS2TJ101	C 100 OHM J 1/4W (FOR TC-33P10N ONLY)
R4856	ERDS2TJ102	C 1KOHM J 1/4W FOR TC-33P10N ONLY)
R4857	ERDS2TJ102	C 1KOHM J 1/4W (FOR TC-33P10N ONLY)
R4860	ERDS2TJ822	C 8.2KOHM J 1/4W (FOR TC-33P10N ONLY)
R4861	EVMEGSA00B23	CONTROL 2KOHMB (FOR TC-33P10N ONLY)
R4862	ERDS2TJ822	C 8.2KOHM J 1/4W FOR TC-33P10N ONLY)
R4863	EVMEGSA00B23	CONTROL 2KOHMB (FOR TC-33P10N ONLY)
R6602	ERJ6GEYJ560	M 56 OHM J 1/10W
R6605	ERJ6GEYJ560	M 56 OHM J 1/10W
R6606	ERJ6GEYJ560	M 56 OHM J 1/10W
R6607	ERJ6GEYJ560	M 56 OHM J 1/10W
R6608	ERJ6GEYJ560	M 56 OHM J 1/10W
R6609	ERJ6GEYJ560	M 56 OHM J 1/10W
R6610	ERJ6GEYJ560	M 56 OHM J 1/10W
R6611	ERJ6GEYJ181	M 180 OHM J 1/10W
R6612	ERJ6GEYJ102	M 1KOHM J 1/10W
R6613	ERJ6GEYJ102	M 1KOHM J 1/10W
R6616	ERJ6GEYJ471	M 470 OHM J 1/10W
R6617	ERJ6GEYJ102	M 1KOHM J 1/10W
R6618	ERJ6GEYJ393	M 39KOHM J 1/10W
R6619	ERJ6GEYJ332	M 3.3KOHM J 1/10W
R6620	ERJ6GEYJ102	M 1KOHM J 1/10W
R6621	ERJ6GEYJ681	M 680 OHM J 1/10W
R6623	ERJ6ENF1131	M 1.13KOHM 1/10W
R6624	ERJ6GEYJ821	M 820 OHM J 1/10W
R6625	ERJ8GEY0R00	M 0 OHM 1/8W
R6626	ERJ6GEYJ562	M 5.6KOHM J 1/10W
R6627	ERJ6GEYJ471	M 470 OHM J 1/10W
R6628	ERJ6GEYJ681	M 680 OHM J 1/10W
R6635	ERJ6GEYJ821	M 820 OHM J 1/10W
R6636	ERJ6GEYJ471	M 470 OHM J 1/10W
R6639	ERJ6GEY0R00	M 0 OHM J 1/10W
R6643	ERJ6GEYJ102	M 1KOHM J 1/10W

Ref. No	Part No.	Description
R6644	ERJ6GEYJ471	M 470 OHM J 1/10W
R6645	ERJ6GEYJ333	M 33KOHM J 1/10W
R6646	ERJ6GEYJ333	M 33KOHM J 1/10W
R6647	ERJ6GEYJ223	M 22KOHM J 1/10W
R6648	ERJ6GEYJ473	M 47KOHM J 1/10W
R6649	ERJ6GEYJ223	M 22KOHM J 1/10W
R6652	ERJ6GEYJ471	M 470 OHM J 1/10W
R6656	ERJ6GEYJ821	M 820 OHM J 1/10W
R6659	ERJ6GEYJ471	M 470 OHM J 1/10W
R6663	ERJ6GEYJ101	M 100 OHM J 1/10W
R6668	ERJ6GEYJ154	M 150KOHM J 1/10W
R6669	ERJ6GEYJ104	M 100KOHM J 1/10W
R6670	ERJ6GEYJ513	M 51KOHM J 1/10W
R6671	ERJ6GEY0R00	M 0 OHM J 1/10W
R6672	ERJ6GEYJ243	M 24KOHM J 1/10W
R6673	ERJ6GEYJ223	M 22KOHM J 1/10W
R6674	ERJ6GEYJ223	M 22KOHM J 1/10W
R6676	ERJ6GEYJ362	M 3.6KOHM J 1/10W
R6678	ERJ6GEYJ102	M 1KOHM J 1/10W
R6679	ERJ6ENF2670	M 267 OHM 1/10W
R6680	ERJ6GEYJ202	M 2KOHM J 1/10W
R6681	ERJ6GEYJ122	M 1.2KOHM J 1/10W
R6682	ERJ6ENF5600	M 560 OHM 1/10W
R6683	ERJ6ENF5600	M 560 OHM 1/10W
R6684	ERJ6GEYJ202	M 2KOHM J 1/10W
R6685	ERJ6GEY0R00	M 0 OHM J 1/10W
R6686	ERJ6GEYJ680	M 68 OHM J 1/10W
R6687	ERJ6GEYJ220	M 22 OHM J 1/10W
R6688	ERJ6GEYJ220	M 22 OHM J 1/10W
R6689	ERJ6GEYJ101	M 100 OHM J 1/10W
R6692	ERJ6GEY0R00	M 0 OHM J 1/10W
R6706	ERJ6GEYJ471	M 470 OHM J 1/10W
R6707	ERJ8GEY0R00	M 0 OHM 1/8W
R6710	ERJ8GEY0R00	M 0 OHM 1/8W
R6711	ERJ8GEY0R00	M 0 OHM 1/8W
R6712	ERJ8GEY0R00	M 0 OHM 1/8W
R6713	ERJ8GEY0R00	M 0 OHM 1/8W
R6714	ERJ8GEY0R00	M 0 OHM 1/8W
R6801	ERJ6GEYJ223	M 22KOHM J 1/10W
R6803	ERJ6GEYJ560	M 56 OHM J 1/10W
R6804	ERJ6GEYJ560	M 56 OHM J 1/10W
R6805	ERJ6GEY0R00	M 0 OHM J 1/10W
R6808	ERJ6GEYJ223	M 22KOHM J 1/10W
R6840	ERJ6GEYJ471	M 470 OHM J 1/10W
R6841	ERJ6GEYJ222	M 2.2KOHM J 1/10W

CAPACITORS

C001	ECA1CM221	E	220UF		16V
C002	ECA1VM470	E	47UF		35V
C003	ECA1HM4R7	E	4.7UF		50V
C008	ECKF1H103ZF	C	0.01UF	Z	50V
C009	ECKF1H103ZF	C	0.01UF	Z	50V
C013	ECA1HM2R2	E	2.2UF		50V
C025	ECKF1H101KB	C	100PF	K	50V
C036	ECA1CM471	E	470UF		16V
C037	ECKF1H103ZF	C	0.01UF	Z	50V
C060	ECKF1H101KB	C	100PF	K	50V
C101	ECJ2VF1H103Z	C	0.01UF	Z	50V
C102	ECJ2VF1H103Z	C	0.01UF	Z	50V
C103	ECA1HM330	E	33UF		50V
C104	ECJ2VF1H103Z	C	0.01UF	Z	50V
C105	ECA1HHGR22	E	0.22UF		50V
C108	ECQB1H333KF	P	0.033UF	K	50V
C109	ECJ2VF1H103Z	C	0.01UF	Z	50V
C111	ECA1HHGR47	E	0.47UF		50V
C112	ECUX1H390JCX	C	39PF	J	50V
C113	ECUX1H102KBX	C	1000PF	K	50V
C115	ECJ2VF1H103Z	C	0.01UF	Z	50V
C117	ECUX1H151JCX	C	150PF	J	50V

Ref. No	Part No.	Description				
C118	ECUX1H020CCX	C	2PF	C	50V	
C121	ECUX1H680JCX	C	68PF	J	50V	
C135	ECUX1H100CCX	C	10PF	C	50V	
C151	ECUX1H820JCX	C	82PF	J	50V	
C152	ECUX1H120JCX	C	12PF	J	50V	
C153	ECJ2VF1H103Z	C	0.01UF	Z	50V	
C154	ECA1HMR22	E	0.22UF		50V	
C156	ECA1CM101	E	100UF		16V	
C161	ECUX1H391JCX	C	390PF	J	50V	
C201	ECJ2VF1H103Z	C	0.01UF	Z	50V	
C202	ECA1HM470	E	47UF		50V	
C203	ECUX1H680JCX	C	68PF	J	50V	
C204	ECJ2VF1H103Z	C	0.01UF	Z	50V	
C205	ECJ2VF1H103Z	C	0.01UF	Z	50V	
C301	EEUNA1A470	E	47UF		10V	
C302	ECA1HMR47	E	0.47UF		50V	
C304	ECA1HM010	E	1UF		50V	
C305	ECUX1H103KBX	C	0.01UF	K	50V	
C306	ECA1HM220	E	22UF		50V	
C307	ECJ2VF1H683Z	C	0.068UF	Z	50V	
C308	ECA1HM3R3	E	3.3UF		50V	
C309	ECEA1HN010U	E	1UF		50V	
C311	ECUX1H103KBX	C	0.01UF	K	50V	
C312	ECA1HM100	E	10UF		50V	
C313	ECA1VM470	E	47UF		35V	
C314	ECA1CM101	E	100UF		16V	
C316	ECA1HM4R7	E	4.7UF		50V	
C317	ECA1HM220	E	22UF		50V	
C318	ECUX1H103KBX	C	0.01UF	K	50V	
C319	ECA1HM010	E	1UF		50V	
C320	ECUX1H103KBX	C	0.01UF	K	50V	
C321	ECUX1H103KBX	C	0.01UF	K	50V	
C322	ECUX1H151JCX	C	150PF	J	50V	
C324	ECUX1H101JCX	C	100PF	J	50V	
C358	ECKF1H101KB	C	100PF	K	50V	
C359	ECQM4104KZ	P	0.1UF	K	400V	
C368	ECQV1H224JM	P	0.22UF	J	50V	
C370	ECKD3D332KBN	C	3300PF	K	2KV	
C373	ECA2EM100	E	10UF		250V	
C377	ECA1CM101	E	100UF		16V	
C401	ECJ2VB1H333K	C	0.033UF	K	50V	
C402	ECSF1EE105V	T	1UF		25V	
C403	ECSF1VE334V	T	0.33UF		35V	
C404	ECA1HM010	E	1UF		50V	
C407	ECA1VM470	E	47UF		35V	
C408	ECEA1CN220U	E	22UF		16V	
C409	ECA1HM100	E	10UF		50V	
C410	ECA0JM102	E	1000UF		6.3V	
C411	ECKF1H102KB	C	1000PF	K	50V	
C415	ECA1HM100	E	10UF		50V	
C416	ECKF1H102KB	C	1000PF	K	50V	
C421	ECA1CM471	E	470UF		16V	
C422	ECKF1H102KB	C	1000PF	K	50V	
C453	EEUNA1E220	E	22UF		25V	
C454	ECA1HM221	E	220UF		50V	
C456	ECQB1104JF	P	0.1UF	J	100V	
C457	ECA1HM100	E	10UF		50V	
C458	ECKF1H471KB	C	470PF	K	50V	
C459	ECQB1224KF	P	0.22UF		100V	
C460	ECA1EM222	E	2200UF		25V	
C461	ECA1HM470	E	47UF		50V	
C462	ECA1EM222	E	2200UF		25V	
C463	ECQB1H103JF	P	0.01UF	J	50V	
C465	ECA1CM101	E	100UF		16V	
C490	ECA1EM102	E	1000UF		25V	
C491	ECKD2H471KB2	C	470PF	K	500V	
C492	ECA1EM102	E	1000UF		25V	
C493	ECKD2H471KB2	C	470PF	K	500V	
C501	ECUX1H182JCX	C	1800PF	J	50V	
C502	ECQB1H333JF	P	0.033UF	J	50V	

Ref. No	Part No.	Description				
C503	ECA1HM100	E	10UF		50V	
C504	ECUX1H221JCX	C	220PF	J	50V	
C505	ECQV1H563JM	P	0.056UF	J	50V	
C506	ECUX1H221JCX	C	220PF	J	50V	
C507	ECQV1H124JM	P	0.12UF	J	50V	
C508	ECUX1H103KBX	C	0.01UF	K	50V	
C509	ECA1HM100	E	10UF		50V	
C514	ECUX1H331JCX	C	330PF	J	50V	
C516	ECA1VM471	E	470UF		35V	
C534	ECUX1H103KBX	C	0.01UF	K	50V	
C551	ECWH16103JVB	P	0.01UF	J	1.6KV	
C553	ECQM6183JZ	P	0.018UF	J	600V	
C554	ECQM6223JZ	P	0.022UF	J	600V	
C555	ECKD3D331KBN	C	330PF	K	2KV	
		(FOR TC-29P10N ONLY)				
C556	ECWH20182JVY	P	1800PF	J	2KV	
		(FOR TC-29P10N)				
C556	ECWH20122JVY	P	1200PF	J	2KV	
		(FOR TC-33P10N)				
C557	ECKD3D681KBP	C	680PF	K	2KV	
C558	ECKD3D681KBP	C	680PF	K	2KV	
C559	ECQB1H183JF	P	0.018UF	J	50V	
C560	ECEA1HN100U	E	10UF		50V	
C561	ECKD2H122KB2	C	1200PF	K	500V	
C562	ECKD2H122KB2	C	1200PF	K	500V	
C563	ECKD2H332KB2	C	3300PF	K	500V	
C564	ECKD2H332KB2	C	3300PF	K	500V	
C565	ECKD2H152KB2	C	1500PF	K	500V	
C566	ECA2AM100	E	10UF		100V	
C567	ECWF2394JBB	P	0.39UF	J	250V	
C568	ECWF2394JBB	P	0.39UF	J	250V	
		(FOR TC-29P10N)				
C568	ECWF2434JBB	P	0.43UF	J	250V	
		(FOR TC-33P10N)				
C569	ECWF2754JBB	P	0.75UF	J	250V	
		(FOR TC-29P10N)				
C569	ECWF2624JBB	P	0.62UF	J	250V	
		(FOR TC-33P10N)				
C570	ECA2EM220	E	22UF		250V	
C571	ECKD2H102KB2	C	1000PF	K	500V	
C572	ECA160V33U	E	33UF		160V	
C573	ECQE2474KF	P	0.47UF	K	250V	
C580	ECA1HM4R7	E	4.7UF		50V	
C581	ECQE2154JF	P	0.15UF	J	250V	
C582	ECQE2154JF	P	0.15UF	J	250V	
C590	ECQE2104JF	P	0.1UF	J	250V	
C591	ECQE2104JF	P	0.1UF	J	250V	
C593	EEUNA1E220	E	22UF		25V	
C602	ECUX1H103KBX	C	0.01UF	K	50V	
C603	EEANA1E1R0	E	1UF		25V	
C604	ECCF1H090DC	C	9PF	D	50V	
C605	ECUX1H103KBX	C	0.01UF	K	50V	
C610	EEANA1E1R0	E	1UF		25V	
C611	EEANA1E1R0	E	1UF		25V	
C612	EEANA1E1R0	E	1UF		25V	
C613	ECUX1H103KBX	C	0.01UF	K	50V	
C614	ECJ2VF1H104Z	C	0.1UF	Z	50V	
C616	ECUX1H103KBX	C	0.01UF	K	50V	
C617	ECEA1HNR33U	E	0.33UF		50V	
C618	ECEA1HNR33U	E	0.33UF		50V	
C703	ECQB1H223JF	P	0.022UF	J	50V	
C704	ECQB1H562JF	P	5600PF	J	50V	
C705	ECKF1H222KB	C	2200PF	K	50V	
C721	ECA1HM100	E	10UF		50V	
C722	ECKF1H103ZF	C	0.01UF	Z	50V	
C751	ECQE1685KN	P	6.8UF	K	100V	
C752	ECA1HM100	E	10UF		50V	
△ C801	ECQU2A823MN	P	0.082UF	M	250V	
△ C802	ECQU2A823MN	P	0.082UF	M	250V	
△ C803	ECKDNB222ME	C	2200PF			
△ C804	ECKDNB222ME	C	2200PF			

Ref. No	Part No.	Description				
△ C805	ECKD2H472PU	C	4700PF	P	500V
C806	ECA1VM221	E	220UF		35V
△ C807	ECKD2H472PU	C	4700PF	P	500V
△ C808	ECKD2H472PU	C	4700PF	P	500V
C809	ECKF1H103ZF	C	0.01UF	Z	50V
C810	EC0S2PA471BB	E	420UF		180V
C811	EC0S2PA471BB	E	420UF		180V
C812	EEUFC1V221	E	220UF		35V
C814	ECA1VHG101	E	100UF		35V
C815	ECKF1H103ZF	C	0.01UF	Z	50V
C816	ECA1CM101	E	100UF		16V
C818	ECA1CM101	E	100UF		16V
C819	ECKD3A332KBP	C	3300PF	K	1KV
C820	ECA1HM100	E	10UF		50V
C821	ECKF1H471KB	C	470PF	K	50V
C822	ECA1VM221	E	220UF		35V
C823	ECA1EM471	E	470UF		25V
C824	ECA1EM471	E	470UF		25V
C825	ECQB1H122JF	P	1200PF	J	50V
C826	ECA1HM010	E	1UF		50V
C827	ECKF1H103ZF	C	0.01UF	Z	50V
△ C828	ECKDNB222ME	C	2200PF		
C831	ECKF1H103ZF	C	0.01UF	Z	50V
C832	EEUFC1V221	E	220UF		35V
C835	ECA1HM010	E	1UF		50V
C836	ECA1VM470	E	47UF		35V
C841	ECKD3A471KBP	C	470PF	K	1KV
C843	ECA1VHG332	E	3300UF		35V
C844	ECKD3A471KBP	C	470PF	K	1KV
C846	ECA1HHG101	E	100UF		50V
C849	EC0S2CA471BB	E	470UF		160V
C850	ECKD3A471KBP	C	470PF	K	1KV
C851	ECA1CM221	E	220UF		16V
C852	ECA1HM100	E	10UF		50V
C857	ECA1CM101	E	100UF		16V
C865	ECA1CM102	E	1000UF		16V
C870	ECA1CM471	E	470UF		16V
C871	ECKF1H103ZF	C	0.01UF	Z	50V
C872	ECKF1H103ZF	C	0.01UF	Z	50V
C873	ECA1CM101	E	100UF		16V
C880	ECA1VM471	E	470UF		35V
C882	EEUFC1V221	E	220UF		35V
C883	ECA1VM471	E	470UF		35V
C885	EEUFC1V221	E	220UF		35V
C896	ECA1VM470	E	47UF		35V
C897	ECKF1H102KB	C	1000PF	K	50V
C901	ECQV1H104JM	P	0.1UF	J	50V
C904	ECKF1H103ZF	C	0.01UF	Z	50V
C921	ECKF1H103ZF	C	0.01UF	Z	50V
C922	ECKF1H103ZF	C	0.01UF	Z	50V
C923	ECKF1H103ZF	C	0.01UF	Z	50V
C924	ECKF1H103ZF	C	0.01UF	Z	50V
C925	ECKF1H103ZF	C	0.01UF	Z	50V
C952	ECA1HM100	E	10UF		50V
C953	ECKF1H103ZF	C	0.01UF	Z	50V
C958	ECA2CM470	E	47UF		160V
C959	ECKD2H103KB2	C	0.01UF	K	500V
C960	ECCD2H151J	C	150PF	J	500V
C961	ECA2AM100	E	10UF		100V
C962	ECKD2H103KB2	C	0.01UF	K	500V
C963	ECCF1H151J	C	150PF	J	50V
C964	ECA1CHG101	E	100UF		50V
C966	ECA1CHG101	E	100UF		50V
C967	ECA1CM221	E	220UF		16V
C968	ECKF1H103ZF	C	0.01UF	Z	50V
C969	ECKF1H103ZF	C	0.01UF	Z	50V
C971	ECKF1H222KB	C	2200PF	K	50V
C1050	ECA1HM470	E	47UF		50V
C1051	ECKF1H103ZF	C	0.01UF	Z	50V
C1054	ECA1CM221	E	220UF		16V

Ref. No	Part No.	Description			
C1055	ECA1CM221	E	220UF		16V
C1070	ECKF1H103ZF	C	0.01UF	Z	50V
C1105	ECKF1H101KB	C	100PF	K	50V
C1106	ECKF1H101KB	C	100PF	K	50V
C1107	ECKF1H101KB	C	100PF	K	50V
C1111	ECKF1H101KB	C	100PF	K	50V
C1112	ECKF1H101KB	C	100PF	K	50V
C1113	ECQB1H103JF	P	0.01UF	J	50V
C1114	ECA1HM2R2	E	2.2UF		50V
C1117	ECKF1H101KB	C	100PF	K	50V
C1121	ECKF1H102KB	C	1000PF	K	50V
C1124	ECA1HM100	E	10UF		50V
C1126	ECKF1H102KB	C	1000PF	K	50V
C1127	ECQB1H473JF	P	0.047UF	J	50V
C1129	ECKF1H472KB	C	4700PF	K	50V
C1132	ECKF1H101KB	C	100PF	K	50V
C1137	ECKF1H101KB	C	100PF	K	50V
C1139	ECKF1H103ZF	C	0.01UF	Z	50V
C1140	ECA1HM100	E	10UF		50V
C1142	ECKF1H103ZF	C	0.01UF	Z	50V
C1143	ECA1HM010	E	1UF		50V
		(FOR TC-33P10N)			
C1144	ECCF1H101JC	C	100PF	J	50V
		(FOR TC-29P10N)			
C1148	ECKF1H103ZF	C	0.01UF	Z	50V
C1150	ECKF1H101KB	C	100PF	K	50V
C1151	ECA1HM010	E	1UF		50V
C1152	ECKF1H221KB	C	220PF	K	50V
C1219	ECA1VM470	E	47UF		35V
C1220	ECKF1H103ZF	C	0.01UF	Z	50V
C1221	ECA1VM470	E	47UF		35V
C1222	ECKF1H103ZF	C	0.01UF	Z	50V
C1225	ECQV1H104JM	P	0.1UF	J	50V
C1227	ECKF1H221KB	C	220PF	K	50V
C1250	ECA1CM221	E	220UF		16V
C1251	ECA1HM4R7	E	4.7UF		50V
C1252	ECKF1H102KB	C	1000PF	K	50V
C1256	ECA1HM100	E	10UF		50V
C1257	ECA1HM100	E	10UF		50V
C1258	ECKF1H103ZF	C	0.01UF	Z	50V
C1259	ECA1HM010	E	1UF		50V
C1260	ECKF1H103ZF	C	0.01UF	Z	50V
C1551	ECEA2CNR47S	E	0.47UF		160V
C1552	ECKF1H103ZF	C	0.01UF	Z	50V
C1553	ECKF1H103ZF	C	0.01UF	Z	50V
C1554	ECQB1H222JF	P	2200PF	J	50V
C1555	ECQB1H103JF	P	0.01UF	J	50V
C1556	ECSF1CE225V	T	2.2UF		16V
C1557	ECQV1H224JM	P	0.22UF	J	50V
C1558	ECQV1H104JM	P	0.1UF	J	50V
C1559	ECQB1H333JF	P	0.033UF	J	50V
C1560	ECA1HM100	E	10UF		50V
C1561	ECA1HM010	E	1UF		50V
C1562	ECQM4223KZ	P	0.022UF	K	400V
C1563	ECKD3D102KBP	C	1000PF	K	2KV
C1564	ECKD3D102KBP	C	1000PF	K	2KV
C1565	ECQB1H103JF	P	0.01UF	J	50V
C1566	ECQB1H222JF	P	2200PF	J	50V
C1567	ECQB1H103JF	P	0.01UF	J	50V
C1568	ECA1HM010	E	1UF		50V
C1569	ECQK1562JZ	P	5600PF	J	100V
C1570	EEANA1E2R2	E	2.2UF		25V
C1571	ECKD3A101KBP	C	100PF	K	1KV
C1572	ECKD3A332KBP	C	3300PF	K	2KV
		(FOR TC-29P10N)			
C1572	ECKD3D272KBP	C	2700PF	K	2KV
		(FOR TC-33P10N)			
C1573	ECQB1H822JF	P	8200PF	J	50V
C1574	ECQB1H333JF	P	0.033UF	J	50V
C1575	ECA1CM471	E	470UF		16V
C1576	ECEA1HN3R3U	E	3.3UF		50V

Ref. No	Part No.	Description				
C1577	ECKD3A471KBP	C	470PF	K		1KV
C1578	ECQM4223KZ	P	0.022UF	K		400V
C1579	ECA1HM100	E	10UF			50V
C1580	ECKD3A271KBP	C	270PF	K		1KV
		(FOR TC-29P10N)				
C1580	ECKD3A331KBP	C	330PF	K		1KV
		(FOR TC-33P10N)				
C2201	ECEA1CN100U	E	10UF			16V
C2202	ECQB1H123JF	P	0.012UF	J		50V
C2203	ECQB1H562JF	P	5600PF	J		50V
C2204	ECEA1HNR22U	E	0.22UF			50V
C2205	ECA1VM470	E	47UF			35V
C2206	ECA1CM101	E	100UF			16V
C2207	ECQB1H272JF	P	2700PF	J		50V
C2208	ECA1HM4R7	E	4.7UF			50V
C2209	ECSF1CE106	T	10UF			16V
C2210	ECA1HM010	E	1UF			50V
C2211	ECSF1CE335V	T	3.3UF			16V
C2212	ECEA1HN4R7U	E	4.7UF			50V
C2213	ECEA1HN4R7U	E	4.7UF			50V
C2214	ECQB1H473JF	P	0.047UF	J		50V
C2215	ECA1HM4R7	E	4.7UF			50V
C2215	ECQV1H274JM	P	0.27UF	J		50V
C2219	ECA1HMR47	E	0.47UF			50V
C2223	ECA1HM4R7	E	4.7UF			50V
C2301	ECQB1H153JF	P	0.015UF	J		50V
C2302	ECA1HM4R7	E	4.7UF			50V
C2303	ECQB1H183JF	P	0.018UF	J		50V
C2304	ECQB1H822JF	P	8200PF	J		50V
C2305	ECQB1H822JF	P	8200PF	J		50V
C2306	ECA1HM4R7	E	4.7UF			50V
C2307	ECA1CM471	E	470UF			16V
C2308	ECA1HM2R2	E	2.2UF			50V
C2309	ECA1VM102	E	1000UF			35V
C2310	ECQV1H104JM	P	0.1UF	J		50V
C2311	ECA1VM222	E	2200UF			35V
C2312	ECA1VM222	E	2200UF			35V
C2313	EEUFC1V221	E	220UF			35V
C2314	ECQV1H104JM	P	0.1UF	J		50V
C2315	ECQV1H104JM	P	0.1UF	J		50V
C2316	ECA1VM102	E	1000UF			35V
C2317	ECA1HM220	E	22UF			50V
C2318	ECA1HM220	E	22UF			50V
C2319	ECA1HM220	E	22UF			50V
C2320	ECKF1H103ZF	C	0.01UF	Z		50V
C2402	ECQB1H393JF	P	0.039UF	J		50V
C2403	ECA1HM010	E	1UF			50V
C2404	ECKF1H223ZF	C	0.022UF	Z		50V
C2405	ECA1HM010	E	1UF			50V
C2406	ECA1HM010	E	1UF			50V
C2407	ECKF1H151KB	C	150PF	K		50V
C2408	EEANA1E1R0	E	1UF			25V
C2409	ECA1HM4R7	E	4.7UF			50V
C2410	ECA1HM4R7	E	4.7UF			50V
C2411	ECA1HM4R7	E	4.7UF			50V
C2412	ECQB1H562JF	P	5600PF	J		50V
C2413	EEANA1E1R0	E	1UF			25V
C2414	ECKF1H103ZF	C	0.01UF	Z		50V
C2415	EEANA1E1R0	E	1UF			25V
C2416	EEANA1E100	E	10UF			25V
C2417	ECA1HM010	E	1UF			50V
C2418	ECQB1H153JF	P	0.015UF	J		50V
C2419	ECA1HM220	E	22UF			50V
C2420	ECKF1H103ZF	C	0.01UF	Z		50V
C2421	ECA1CM471	E	470UF			16V
C2424	EEANA1E1R0	E	1UF			25V
C2425	EEANA1E1R0	E	1UF			25V
C2426	ECA1HM100	E	10UF			50V
C2427	ECA1HM100	E	10UF			50V

Ref. No	Part No.	Description				
C2428	ECA1HM4R7	E	4.7UF			50V
C2429	ECA1HM4R7	E	4.7UF			50V
C2430	ECA1CM101	E	100UF			16V
C2432	ECQV1H104JM	P	0.1UF	J		50V
C2433	ECQB1H333JF	P	0.033UF	J		50V
C2434	ECA1HM4R7	E	4.7UF			50V
C2435	ECA1HM010	E	1UF			50V
C2436	ECQB1H333JF	P	0.033UF	J		50V
C2437	ECQB1H102JF	P	1000PF	J		50V
C2438	ECQB1H333JF	P	0.033UF	J		50V
C2439	ECQB1H102JF	P	1000PF	J		50V
C2440	ECQB1H102JF	P	1000PF	J		50V
C2441	ECA1HM010	E	1UF			50V
C2442	ECA1HM010	E	1UF			50V
C2443	ECA1HM010	E	1UF			50V
C2444	EEANA1E1R0	E	1UF			25V
C2445	EEANA1E1R0	E	1UF			25V
C2446	EEANA1E100	E	10UF			25V
C2447	ECKF1H103ZF	C	0.01UF	Z		50V
C2448	ECQB1H473JF	P	0.047UF	J		50V
C2801	ECKD3A471KBP	C	470PF	K		1KV
C2802	ECA1VHG102	E	1000UF			35V
C2803	ECKF1H223ZF	C	0.022UF	Z		50V
C3002	ECEA1HKA010	E	1UF			50V
C3003	ECEA1HKA010	E	1UF			50V
C3006	ECEA1HKA010	E	1UF			50V
C3007	ECEA1HKA010	E	1UF			50V
C3008	ECEA1HKA010	E	1UF			50V
C3009	ECEA1HKA010	E	1UF			50V
C3015	ECEA1HKA010	E	1UF			50V
C3016	ECEA1HKA010	E	1UF			50V
C3017	ECEA1HKA010	E	1UF			50V
C3018	ECEA1HKA010	E	1UF			50V
C3019	ECA1EM471	E	470UF			25V
C3020	ECA1EM471	E	470UF			25V
C3023	ECJ2VF1H103Z	C	0.01UF	Z		50V
C3024	ECJ2VF1H103Z	C	0.01UF	Z		50V
C3027	ECEA1HKA010	E	1UF			50V
C3028	ECEA1HKA010	E	1UF			50V
C3037	ECJ2VF1H103Z	C	0.01UF	Z		50V
C3060	EEANA1E1R0	E	1UF			25V
C3062	ECA1EM471	E	470UF			25V
C3065	ECEA1CKA470	E	47UF			16V
C3070	ECJ2VF1H103Z	C	0.01UF	Z		50V
C3071	ECJ2VF1H103Z	C	0.01UF	Z		50V
C3072	ECA1EM471	E	470UF			25V
C3075	ECUX1H102KBX	C	1000PF	K		50V
C3077	ECUX1H102KBX	C	1000PF	K		50V
C3079	ECUX1H102KBX	C	1000PF	K		50V
C3080	ECUX1H102KBX	C	1000PF	K		50V
C3081	ECUX1H102KBX	C	1000PF	K		50V
C3082	ECUX1H102KBX	C	1000PF	K		50V
C3083	ECEA1HKN010	E	1UF			50V
C3084	ECUX1H102KBX	C	1000PF	K		50V
C3085	EEANA1E1R0	E	1UF			25V
C3086	EEANA1E1R0	E	1UF			25V
C3087	ECUX1H102KBX	C	1000PF	K		50V
C3104	EEANA1E1R0	E	1UF			25V
C3105	ECEA1HKA010	E	1UF			50V
C3106	EEANA1E1R0	E	1UF			25V
C3107	ECEA1HKA010	E	1UF			50V
C3108	ECJ2VF1H103Z	C	0.01UF	Z		50V
C3171	ECKF1H103ZF	C	0.01UF	Z		50V
C3172	ECA1CM221	E	220UF			16V
C3201	ECA1HM220	E	22UF			50V
C3224	ECA1VM470	E	47UF			35V
C3225	ECA1VM470	E	47UF			35V
C3226	ECKF1H103ZF	C	0.01UF	Z		50V
C3227	ECA1HM010	E	1UF			50V
C4801	ECA1HM4R7	E	4.7UF			50V

Ref. No	Part No.	Description				
C4802	ECA1HM4R7	E	4.7UF			50V
C4803	ECQV1H334JM	P	0.33UF	J		50V
C4804	ECQV1H334JM	P	0.33UF	J		50V
C4805	ECA1VM470	E	47UF			35V
C4806	ECA1HM4R7	E	4.7UF			50V
		(FOR TC-33P10N ONLY)				
C4807	ECA1HM4R7	E	4.7UF			50V
		(FOR TC-33P10N ONLY)				
C4808	ECQV1H334JM	P	0.33UF	J		50V
		(FOR TC-33P10N ONLY)				
C4809	ECQV1H334JM	P	0.33UF	J		50V
		(FOR TC-33P10N ONLY)				
C4810	ECA1VM470	E	47UF			35V
		(FOR TC-33P10N ONLY)				
C4811	ECKF1H103ZF	C	0.01UF	Z		50V
		(FOR TC-33P10N ONLY)				
C4812	ECA1HM100	E	10UF			50V
		(FOR TC-33P10N ONLY)				
C4813	ECA1CM101	E	100UF			16V
		(FOR TC-33P10N ONLY)				
C4814	ECA1CM101	E	100UF			16V
		(FOR TC-33P10N ONLY)				
C4820	ECA1HM100	E	10UF			50V
		(FOR TC-33P10N ONLY)				
C4821	ECA1HM100	E	10UF			50V
		(FOR TC-33P10N ONLY)				
C4822	ECQP1H103JZ	P	0.01UF	J		50V
		(FOR TC-33P10N ONLY)				
C4823	ECEA1CN100U	E	10UF			16V
		(FOR TC-33P10N ONLY)				
C4824	ECEA1CN100U	E	10UF			16V
		(FOR TC-33P10N ONLY)				
C4825	EEUFC1C560	E	56UF			16V
		(FOR TC-33P10N ONLY)				
C6601	ECJ2VF1H104Z	C	0.1UF	Z		50V
C6602	ECJ2VF1H104Z	C	0.1UF	Z		50V
C6603	ECJ2VF1H104Z	C	0.1UF	Z		50V
C6604	ECJ2VF1H104Z	C	0.1UF	Z		50V
C6605	ECJ2VF1H104Z	C	0.1UF	Z		50V
C6607	ECUX1H220JCX	C	22PF	J		50V
C6616	ECJ2VF1H103Z	C	0.01UF	Z		50V
C6619	ECJ2VF1H103Z	C	0.01UF	Z		50V
C6621	ECUX1H151JCX	C	150PF	J		50V
C6622	ECUX1H103KBX	C	0.01UF	K		50V
C6623	ECJ2VF1H104Z	C	0.1UF	Z		50V
C6624	ECJ2VF1H104Z	C	0.1UF	Z		50V
C6625	ECJ2VF1H104Z	C	0.1UF	Z		50V
C6626	ECJ2VF1H104Z	C	0.1UF	Z		50V
C6627	ECJ2VF1H104Z	C	0.1UF	Z		50V
C6628	ECUX1H270JCX	C	27PF	J		50V
C6629	ECJ2VF1H104Z	C	0.1UF	Z		50V
C6630	ECJ2VF1H103Z	C	0.01UF	Z		50V
C6631	ECUX1H270JCX	C	27PF	J		50V
C6632	ECJ2VF1H103Z	C	0.01UF	Z		50V
C6633	ECJ2VF1H103Z	C	0.01UF	Z		50V
C6634	ECJ2VF1H104Z	C	0.1UF	Z		50V
C6635	ECJ2VF1H104Z	C	0.1UF	Z		50V
C6636	ECJ2VF1H104Z	C	0.1UF	Z		50V
C6637	ECJ2VF1H104Z	C	0.1UF	Z		50V
C6638	ECJ2VF1H103Z	C	0.01UF	Z		50V
C6639	ECUX1H222KBX	C	2200PF	K		50V
C6640	ECJ2VF1H103Z	C	0.01UF	Z		50V
C6641	ECJ2VF1H104Z	C	0.1UF	Z		50V
C6642	ECJ2VF1H104Z	C	0.1UF	Z		50V
C6643	ECJ2VF1H104Z	C	0.1UF	Z		50V
C6644	ECJ2VF1H104Z	C	0.1UF	Z		50V
C6645	ECJ2VF1H104Z	C	0.1UF	Z		50V
C6646	ECJ2VF1H104Z	C	0.1UF	Z		50V
C6650	ECEA1CKA470	E	47UF			16V
C6651	ECEA1CKA470	E	47UF			16V
C6653	ECEA1HKA3R3	E	3.3UF			50V
C6654	ECEA1CKA470	E	47UF			16V
C6655	ECEA1CKA470	E	47UF			16V
C6656	ECEA1CKA470	E	47UF			16V

Ref. No	Part No.	Description				
C6657	ECEA1CKA470	E	47UF			16V
C6659	ECEA1CKA470	E	47UF			16V
C6670	ECEA1CKA470	E	47UF			16V
C6671	ECEA1CKA470	E	47UF			16V
C6672	ECEA1HKA010	E	1UF			50V
C6673	ECEA1CKA470	E	47UF			16V
C6675	ECEA1HN3R3U	E	3.3UF			50V
C6676	ECEA1HN4R7U	E	4.7UF			50V
C6678	ECJ2VF1H104Z	C	0.1UF	Z		50V
C6679	ECEA1HKA010	E	1UF			50V
C6680	ECEA1CKA470	E	47UF			16V
C6683	ECUX1H270JCX	C	27PF	J		50V

OTHERS

A1	TJS5A9190	10P CONNECTOR
A2	TJS5A9190	10P CONNECTOR
A3	TJS5A9190	10P CONNECTOR
A6	TJS3A9010	22P CONNECTOR
A7	TJS3A8960	36P CONNECTOR
A9	TJS3A9010	22P CONNECTOR
A12	TJSF17325	25P CONNECTOR
A13	TJSF17325	25P CONNECTOR
A16	TJS3A9880	8P CONNECTOR (FOR TC-33P10N ONLY)
A20	TJSF00308	CONNECTOR
A21	TJSF20016	16P CONNECTOR
A22	TJSF20016	16P CONNECTOR
A23	TJSF20016	16P CONNECTOR
A31	TJS5A9420	8P CONNECTOR
A32	TJS5A9420	8P CONNECTOR
A33	TJS5A9420	8P CONNECTOR
D2	TJS5A9490	6P CONNECTOR
D4	TJS3A9640	3P CONNECTOR
D5	TJS5A9490	6P CONNECTOR
D12	TJS5A9490	6P CONNECTOR
D13	TJS5A9490	6P CONNECTOR
D20	TJSF00208	CONNECTOR
D21	TJSF19916	16P CONNECTOR
D22	TJSF19916	16P CONNECTOR
D23	TJSF19916	16P CONNECTOR
D35	TJS5A9420	8P CONNECTOR
D36	TJS5A9470	5P CONNECTOR
DF1	TJS3A9140	CONNECTOR
DF2	TJS3A9260	5P CONNECTOR
DF3	TJS3A9640	3P CONNECTOR
G1	TJS5A9180	10P PLUG
G2	TJS5A9180	10P PLUG
G3	TJS5A9180	10P PLUG
G5	TJSF19916	16P CONNECTOR
G6	TJS3A9880	8P CONNECTOR (FOR TC-33P10N ONLY)
G8	TJS3A9650	4P CONNECTOR
G9	TJS3A9640	3P CONNECTOR
G10	TJS3A9640	3P CONNECTOR
G11	TJS3A9900	10P CONNECTOR (FOR TC-33P10N ONLY)
G12	TJS3A9650	4P CONNECTOR
G13	TJS3A9660	5P CONNECTOR (FOR TC-33P10N ONLY)
GM1	TJS3A9900	10P CONNECTOR (FOR TC-33P10N ONLY)
H1	TJS3A9020	22P CONNECTOR
H2	TJS3A9020	22P CONNECTOR
H3	TJS3A8970	36P CONNECTOR
H4	TJS3A9680	7P CONNECTOR
H5	TJS1A8140	PHONO PIN (8P)
K1	TJS5A9470	5P CONNECTOR
K5	TJSF20016	16P CONNECTOR
L1	TJS3A9880	8P CONNECTOR
L2	TJS118590	2P CONNECTOR

Ref. No	Part No.	Description
L3	TJS3A9680	7P CONNECTOR
N1	TJS6A9680	8P CONNECTOR
N2	TJS6A9670	6P CONNECTOR
P1	TJS3A8020	AC CONNECTOR
P2	TJS3A9250	6P CONNECTOR
P3	TJS3A9680	7P CONNECTOR
P5	TJS3A9250	6P CONNECTOR
P12	TJS3A9250	6P CONNECTOR
P13	TJS3A9250	6P CONNECTOR
V1	TJS3A9260	5P CONNECTOR
AG12	TJSF17425	25P CONNECTOR
AG13	TJSF17425	25P CONNECTOR
DG1	TJS3A9140	CONNECTOR
DG2	TJS3A9140	CONNECTOR
DG3	TJS3A9140	CONNECTOR
F001-L	TJC6319-1	FUSE HOLDER
F001-R	TJC6319-1	FUSE HOLDER
△ F001	XBA1E50NS5	FUSE
F002-L	TJC6319-1	FUSE HOLDER
F002-R	TJC6319-1	FUSE HOLDER
△ F002	XBA1E50NS5	FUSE
JA1	ERJ6GEY0R00	M 0 OHM J 1/10W
JA2	ERJ6GEY0R00	M 0 OHM J 1/10W
JA3	ERJ6GEY0R00	M 0 OHM J 1/10W
JA4	ERJ6GEY0R00	M 0 OHM J 1/10W
JA5	ERJ6GEY0R00	M 0 OHM J 1/10W
JA6	ERJ6GEY0R00	M 0 OHM J 1/10W
JA7	ERJ6GEY0R00	M 0 OHM J 1/10W
JA8	ERJ6GEY0R00	M 0 OHM J 1/10W
JA9	ERJ6GEY0R00	M 0 OHM J 1/10W
JA10	ERJ6GEY0R00	M 0 OHM J 1/10W
JA11	ERJ6GEY0R00	M 0 OHM J 1/10W
JA12	ERJ6GEY0R00	M 0 OHM J 1/10W
JA13	ERJ6GEY0R00	M 0 OHM J 1/10W
JA14	ERJ6GEY0R00	M 0 OHM J 1/10W
JA15	ERJ6GEY0R00	M 0 OHM J 1/10W
JA16	ERJ6GEY0R00	M 0 OHM J 1/10W
JA17	ERJ6GEY0R00	M 0 OHM J 1/10W
JA18	ERJ6GEY0R00	M 0 OHM J 1/10W
JA19	ERJ6GEY0R00	M 0 OHM J 1/10W
JA20	ERJ6GEY0R00	M 0 OHM J 1/10W
JA21	ERJ6GEY0R00	M 0 OHM J 1/10W
△ JK351	TJSC01100	CRT SOCKET
JK3001	TJBA044	REAR TERMINAL
JK3151	TJBA087	FRONT TERMINAL
JS2	ERJ6GEY0R00	M 0 OHM J 1/10W
JS3	ERJ6GEY0R00	M 0 OHM J 1/10W
JS7	ERJ6GEY0R00	M 0 OHM J 1/10W
JS01	ERJ6GEY0R00	M 0 OHM J 1/10W
JS02	ERJ6GEY0R00	M 0 OHM J 1/10W
JS03	ERJ6GEY0R00	M 0 OHM J 1/10W
JS04	ERJ6GEY0R00	M 0 OHM J 1/10W
JS05	ERJ6GEY0R00	M 0 OHM J 1/10W
JS06	ERJ6GEY0R00	M 0 OHM J 1/10W
JS07	ERJ6GEY0R00	M 0 OHM J 1/10W
JS08	ERJ6GEY0R00	M 0 OHM J 1/10W
S021	ERJ6GEY0R00	M 0 OHM J 1/10W
JS034	ERJ6GEY0R00	M 0 OHM J 1/10W
JS1002	ERDS2TJ152	C 1.5KOHM J 1/4W
JS3008	ERJ6GEY0R00	M 0 OHM J 1/10W
JS3016	ERJ6GEY0R00	M 0 OHM J 1/10W
JS3021	ERJ6GEY0R00	M 0 OHM J 1/10W
JS6601	ERJ6GEY0R00	M 0 OHM J 1/10W
△ RL001	TSE10801	RELAY
△ RL002	TSEH8014	RELAY
RL803	TSEH0005	RELAY
△ RTL	TNPA1080AM	CIRCUIT BOARD L (FOR TC-29P10N)
△ RTL	TNPA1080AN	CIRCUIT BOARD L (FOR TC-33P10N)
△ RTL	TNPA1215	CIRCUIT BOARD AG

Ref. No	Part No.	Description
△ RTL	TNPA1216AB	CIRCUIT BOARD H
△ RTL	TNPA1217AC	CIRCUIT BOARD P (FOR TC-29P10N)
△ RTL	TNPA1217AD	CIRCUIT BOARD P (FOR TC-33P10N)
△ RTL	TNPA1218	CIRCUIT BOARD DF (FOR TC-29P10N)
△ RTL	TNPA1218AB	CIRCUIT BOARD DF (FOR TC-33P10N)
△ RTL	TNPA1587	CIRCUIT BOARD GM (FOR TC-33P10N ONLY)
△ RTL	TNPA1621	CIRCUIT BOARD G (FOR TC-29P10N)
△ RTL	TNPA1623	CIRCUIT BOARD G (FOR TC-33P10N)
△ RTL	TNPA1624	CIRCUIT BOARD K (FOR TC-33P10N)
△ RTL	TNPA1625	CIRCUIT BOARD V (FOR TC-33P10N)
△ RTL	TNPA1641	CIRCUIT BOARD K (FOR TC-29P10N)
△ RTL	TNPA1642	CIRCUIT BOARD V (FOR TC-29P10N)
△ RTL	TNPH0240AC	CIRCUIT BOARD A (FOR TC-29P10N)
△ RTL	TNPH0240AD	CIRCUIT BOARD A (FOR TC-33P10N)
△ RTL	TXNDG10N71	CIRCUIT BOARD DG
△ RTL	TXN/D10EAF	CIRCUIT BOARD D (FOR TC-33P10N)
△ RTL	TXN/D10EBF	CIRCUIT BOARD D (FOR TC-29P10N)
S002	EVQ81F05R	SWITCH
S003	EVQ81F05R	SWITCH
S004	EVQ81F05R	SWITCH
S005	EVQ81F05R	SWITCH
S006	EVQ81F05R	SWITCH
S007	EVQ81F05R	SWITCH
S008	EVQ81F05R	SWITCH
S551	TSEB8007	SLIDE SWITCH
S801	ESB41A1154	SWITCH
X101	EFCH45MGP2N	SAW FILTER
X102	EFCS4R5MW5BA	CERAMIC FILTER
X201	EFCS4R5MS4W	CERAMIC TRAP
X501	EF0A503KS4KT	CERAMIC FILTER
X601	TSS2143-M	CRYSTAL
X1101	TAAA0002	CERAMIC FILTER